OFFICIAL COPY - 001.39621.000073 - FB001 - 01 - Approved(A) - - 07-Aug-2013 09:18 AM

Project : FPSO Cidade de Maricá - Alfa

Project Number : HI39621

	P.O. Nr.	CDR Code	Seq.	Rev.
SBM Document Number :	001 . 39621 . 000073 -	FB	001	- 00

SBM CDR Description : Operating Manual

IS CDR Code FC Applicable For This Order ? : NO (This Manual includes - Maintenance Manual / Schedule)

This document is part of VDB : 2

Vendor : Flowserve do Brasil Ltda.

Address : Estrada do Pedregoso, 1.975
Rio de Janeiro, RJ, Brazil

Package Description : Water Injection Pump

Vendor P.O. Reference : RR 36268

Vendor Document Number : 8.4.036268.01.035

Vendor Document Revision : 0

Document Title : Installation, Operation and Maintenance Manual

Total Pages (incl. front page) **:** 101

Applicable Tag Number(s) :

A-T2610,A-T2620

Notes :

Signed digitally by SBM Offshore Group
CHK: B. Veen, M. Chiodi, H. Calian, APP: B. Veen on 07-Aug-2013

OFFICIAL COPY - 001.39621.000073 - FB001 - 01 - Approved(A) - - - 07-Aug-2013 09:18 AM

FLOWSERVE

USER INSTRUCTIONS

WIK Centrifugal Pumps

Installation
Operation
Maintenance

Radially Split, Multistage Barrel Pump, Cartridge

PCN=BO2662 5/09 (E)
Original Instructions

Type:	**WIK**
Size:	**10WIK169**
Serial No.:	**12AE0013/14**
Customer:	**PETROBRAS - SBM**
Customer Order No.:	**26185**
Equipment/Item No.:	**-**

⚠ ***These instructions must be read prior to installing, operating, using and maintaining this equipment.***

Experience In Motion

OFFICIAL COPY - 001.39621.000073 - FB001 - 01 - Approved(A) - - - 07-Aug-2013 09:18 AM

TABLE OF CONTENTS

1 INTRODUCTION AND SAFETY 4
1.1 General 4
1.2 CE marking and approvals 4
1.3 Disclaimer 4
1.4 Copyright 4
1.5 Duty conditions 4
1.6 Safety 5
1.6.1 Summary of safety markings 5
1.6.2 Personnel qualification and training 5
1.6.3 Safety action 5
1.6.4 Products used in potentially explosive atmospheres 6
1.7 Safety labels 8
1.8 Specific machine performance 8
1.9 Noise level 8

2 TRANSPORT AND STORAGE 9
2.1 Consignment receipt and unpacking 9
2.1.1 Receipt inspection 9
2.1.2 Inboard and outboard bearing shipping shims 9
2.2 Handling 9
2.3 Lifting 10
2.3.1 Baseplate-mounted pump and driver 10
2.3.2 Soleplate-mounted barrel pump 10
2.3.3 Multistage internal assembly: Cartridge Barrel pump 11
2.3.4 Multistage rotor 11
2.3.5 Multistage shaft 12
2.4 Storage 12
2.4.1 Pump preservative standards 12
2.4.2 Rotor preservative standards 13
2.4.3 Depreserving 14
2.5 Recycling and end of product life 14

3 PUMP DESCRIPTION 14
3.1 Configurations 14
3.2 Name nomenclature 14
3.3 Design of major parts 14
3.3.1 Cartridge Assembly 14
3.3.2 Intermediate cover diffuser 14
3.3.3 Suction spacer casing and discharge spacer casing 15
3.3.4 Wearing rings and bushings 15
3.3.5 Impellers 15
3.3.6 Bearings 15
3.3.7 Shaft seals 15
3.3.8 Lube oil system 15
3.3.9 Seal piping 15
3.3.10 Baseplates 15
3.3.11 Drivers 15
3.3.12 Special tools 15
3.3.13 Interference fit 15
3.4 Performance and operating limits 15

4 INSTALLATION 15
4.1 Location 15
4.2 Part assemblies 16
4.2.1 Leveling Tools and equipment 16
4.2.2 One baseplate for entire train of units 16
4.2.3 Baseplates in train 17
4.3 Foundation 17
4.3.1 Level the baseplate 17
4.4 Grouting 17
4.4.1 Grouting with cement and sand 17
4.4.2 Grouting with epoxy 18
4.5 Initial alignment 19
4.5.1 Alignment tools and equipment 19
4.5.2 Alignment accuracy 19
4.5.3 Reasons for field alignment of pump and driver 19
4.5.4 Alignment preconditions 19
4.5.5 Installing coupling 20
4.5.6 Alignment procedure 20
4.6 Piping 22
4.6.1 Recommendations and notes for piping connects 22
4.6.2 Installing nozzle extensions 23
4.6.3 Seal piping flushing and cleaning 24
4.6.3.1 Carbon steel piping 24
4.7 Electrical connections 24
4.8 Final shaft alignment check 24
4.8.1 Setting driver shaft end space 25
4.8.2 Tapping driver mount pads 25
4.8.3 Cold alignment 26
4.8.4 Hot alignment 28
4.9 Protection systems 29

5 COMMISSIONING STARTUP, OPERATION AND SHUTDOWN 29
5.1 Precommissioning procedure 29
5.1.1 Readying and servicing driver 29
5.1.2 Readying and servicing pump and auxiliary systems 29
5.2 Pump lubricants 31
5.2.1 Lubricating oil 31
5.2.2 Lube oil change recommendations 32
5.2.3 Oil specifications 32
5.2.4 Flushing and cleaning lube oil system 32
5.3 Impeller clearance 33
5.4 Direction of rotation 33
5.5 Guarding 33
5.6 Priming and auxiliary supplies 34
5.7 Starting the pump 34
5.8 Operation 35
5.8.1 Checks and minor adjustments 35
5.8.2 Operating at reduced capacity 36

OFFICIAL COPY - 001.39621.000073 - FB001 - 01 - Approved(A) - - - 07-Aug-2013 09:18 AM

5.9 Stopping and shutdown 36
5.9.1 From on-line operation to cold shutdown 36
5.9.2 From on-line operation to hot standby 37
5.10 Hydraulic, mechanical and electrical duty 37
5.10.1 Pump flow 37
5.10.2 Balance 38
5.10.3 Minimum flow 38
5.10.4 Minimum flow orifice 38
5.10.5 Net Positive Suction Head 38
5.10.6 Shaft seal 38
5.10.7 Cooling water system 38
5.10.8 Lube oil system 38
5.10.9 Thermal expansion 39

6 MAINTENANCE 39
6.1 Maintenance Schedule 39
6.1.1 Periodic seal replacement 39
6.1.2 Bearing housing gasket material and thickness 39
6.1.3 Acid or caustic wash 39
6.1.4 Lube oil system component maintenance 40
6.1.5 Preventive maintenance schedule 40
6.2 Spare parts 41
6.2.1 Ordering of spares 41
6.2.2 Service instructions 41
6.2.3 Storage of spares 41
6.2.4 Rotor preservative standards 41
6.3 Recommended spares and consumable items 41
6.4 Maintenance tools and equipment 42
6.4.1 Tools for Cartridge Assembly 42
6.4.2 Tools for Coupling 42
6.4.3 Tools for Bearings 42
6.4.4 Tools for Casing Cover (Head) 42
6.4.5 Tools for Internal Assembly 42
6.5 Fastener torques 42
6.5.1 Single row cover-to-case bolting metal-to-metal gasketed joints 42
6.5.2 Torque procedure pump foot hold-down bolts 43
6.6 Setting impeller clearance 44
6.7 Disassembly 44
6.7.1 General instructions 44
6.7.2 Coupling removal 47
6.7.3 Removing cartridge assembly 47
6.7.4 Main lube oil pump removal 49
6.7.5 Bearing disassembly 49
6.7.6 Mechanical seal 50
6.7.7 Casing cover removal and disassembly 50
6.8 Part cleaning, inspection, and repair 54
6.8.1 Cleaning 54
6.8.2 Inspection and repair 54
6.9 Pump Assembly 59
6.9.1 Internal Assembly 59
6.9.2 Casing Cover 62
6.9.3 Rotor Alignment 63
6.9.4 Mechanical Seal 65
6.9.5 Bearing Assembly 65
6.9.6 Main Lube Oil Pump Installation 66
6.9.7 Cartridge Assembly Install 67
6.9.8 Coupling Installation 67
6.9.9 Final Assembly Tasks 68

7 FAULTS; CAUSES AND REMEDIES 69

8 PARTS LIST AND DRAWINGS 73

9 CERTIFICATION 73

10 OTHER RELEVANT DOCUMENTATION AND MANUALS 73
10.1 Supplementary user instruction manuals 73
10.2 Change notes 73
10.3 Operating specification 74

TABLE OF FIGURES

Figure 2- 1: Baseplate mounted Pump & Driver Lifting 10
Figure 2- 2: Barrel Pump Lifing 11
Figure 2- 3: Cartridge Assembly Lifting Points 11
Figure 2- 4: Rotor Lifting Points 12

Figure 4- 1 : Baseplate Top View (Typical) 16
Figure 4- 2 : Foundation Bolt 17
Figure 4- 3 : Grouting Baseplates or Soleplates 18
Figure 4- 4 : Determining Bar Sag 20
Figure 4- 5 : Alignment Orientation 21
Figure 4- 6 : Dial Indicator Setup for Alignment 21
Figure 4- 7 : Vapaor Pockets 22
Figure 4- 8 : Suction Piping Temporary Screen 23
Figure 4- 9 : Motor Shaft Running Space 25
Figure 4- 10 : Measuring Distance between Ends of Pump and Driver Shafts 25
Figure 4- 11 : Shaft Alignment Calculator 27
Figure 4- 12 : Alignment Measurement Points 27

Figure 6- 1 : Roll and Heel Bars 42
Figure 6- 2 : Torque Pattern Chart 44
Figure 6- 3 : Task Schedule for Inspection, Repair, and Assembly of Internal Assembly 45
Figure 6- 4 : Task Schedule for Installation of Major Part/Assembly 46
Figure 6- 5 : Typical Tension Flange Arrangement 47
Figure 6- 6 : Typical Assembly Skid 47
Figure 6- 7 : Typical Alignment Tool 48
Figure 6- 8 : Rotor Lateral Movement 62
Figure 6- 9 : Pressure Dam Bearing Alignment 65

Table 6- 1 : 100% Final Torque Values by Stud/Bolt Diameter (35 kpsi stress) 43

OFFICIAL COPY - 001.39621.000073 - FB001 - 01 - Approved(A) - - - 07-Aug-2013 09:18 AM

Table 10- 1: Clearances for Sleeve Bearing and Oil Baffles 75

1 INTRODUCTION AND SAFETY

1.1 General

These instructions must always be kept close to the product's operating location or directly with the product.

Flowserve products are designed, developed and manufactured with state-of-the-art technologies in modern facilities. The unit is produced with great care and commitment to continuous quality control, utilizing sophisticated quality techniques, and safety requirements.

Flowserve is committed to continuous quality improvement and being at service for any further information about the product in its installation and operation or about its support products, repair and diagnostic services.

These instructions are intended to facilitate familiarization with the product and its permitted use. Operating the product in compliance with these instructions is important to help ensure reliability in service and avoid risks. The instructions may not take into account local regulations; ensure such regulations are observed by all, including those installing the product. Always coordinate repair activity with operations personnel, and follow all plant safety requirements and applicable safety and health laws/and regulations.

These instructions must be read prior to installing, operating, using and maintaining the equipment in any region worldwide. The equipment must not be put into service until all the conditions relating to safety noted in the instructions, have been met. Failure to follow and apply the present user instructions is considered to be misuse. Personal injury, product damage, delay or failure caused by misuse are not covered by the Flowserve warranty.

1.2 CE marking and approvals

It is a legal requirement that machinery and equipment put into service within certain regions of the world shall conform with the applicable CE Marking Directives covering Machinery and, where applicable, Low Voltage Equipment, Electromagnetic Compatibility (EMC), Pressure Equipment Directive (PED) and Equipment for Potentially Explosive Atmospheres (ATEX).

Where applicable, the Directives and any additional Approvals cover important safety aspects relating to machinery and equipment and the satisfactory provision of technical documents and safety Instructions. Where applicable this document incorporates information relevant to these Directives and Approvals.

To confirm the Approvals applying and if the product is CE marked, check the serial number plate markings and the Certification. (See section 9, Certification.)

1.3 Disclaimer

Information in these User Instructions is believed to be reliable. In spite of all the efforts of Flowserve to provide sound and all necessary information the content of this manual may appear insufficient and is not guaranteed by Flowserve as to its completeness or accuracy.

Flowserve manufactures products to exacting International Quality Management System Standards as certified and audited by external Quality Assurance organizations. Genuine parts and accessories have been designed, tested and incorporated into the products to help ensure their continued product quality and performance in use. As Flowserve cannot test parts and accessories sourced from other vendors the incorrect incorporation of such parts and accessories may adversely affect the performance and safety features of the products. The failure to properly select, install or use authorized Flowserve parts and accessories is considered to be misuse. Damage or failure caused by misuse is not covered by Flowserve warranty. In addition, any modification of Flowserve products or removal of original components may impair the safety of these products in their use.

1.4 Copyright

All rights reserved. No part of these instructions may be reproduced, stored in a retrieval system or transmitted in any form or by any means without prior permission of Flowserve.

1.5 Duty conditions

This product has been selected to meet the specifications of your purchaser order. The acknowledgement of these conditions has been sent

OFFICIAL COPY - 001.39621.000073 - FB001 - 01 - Approved(A) - - - 07-Aug-2013 09:18 AM

separately to the Purchaser. A copy should be kept with these instructions.

Note: Refer to section 10.3

The product must not be operated beyond the parameters specified for the application. If there is any doubt as to the suitability of the product for the application intended, contact Flowserve for advice, quoting the serial number.

If the conditions of service on your purchase order are going to be changed (for example liquid pumped, temperature or duty) it is requested that the user seek the written agreement of Flowserve before start up

1.6 Safety

1.6.1 Summary of safety markings

These User Instructions contain specific safety markings where non-observance of an instruction would cause hazards. The specific safety markings are:

DANGER This symbol indicates electrical safety instructions where non-compliance will involve a high risk to personal safety or the loss of life.

This symbol indicates safety instructions where non-compliance would affect personal safety and could result in loss of life.

This symbol indicates “hazardous substances and toxic fluid” safety instructions where non-compliance would affect personal safety and could result in loss of life.

CAUTION This symbol indicates safety instructions where non-compliance would involve some risk to safe operation and personal safety and would damage the equipment or property.

This symbol indicates explosive atmosphere marking according to ATEX. It is used in safety instructions where non-compliance in the hazardous area would cause the risk of an explosion.

This symbol indicates is used in safety instructions to remind not to rub non-metallic surfaces with a dry cloth; ensure cloth is damp. It is used where non-compliance in the hazardous area would cause the risk of an explosion.

Note: This sign is not a safety symbol but indicates an important instruction in the assembly process.

1.6.2 Personnel qualification and training

All personnel involved in the operation, installation, inspection and maintenance of the unit must be qualified to carry out the work involved. If the personnel in question do not already possess the necessary knowledge and skill, appropriate training and instruction must be provided. If required the operator may commission the manufacturer/supplier to provide applicable training.

Always coordinate repair activity with operations and health and safety personnel, and follow all plant safety requirements and applicable safety and health laws and regulations.

1.6.3 Safety action

This is a summary of conditions and actions to prevent injury to personnel and damage to the environment and to equipment. For products used in potentially explosive atmospheres section 1.6.4 also applies.

CAUTION **PREVENT EXCESSIVE EXTERNAL PIPE LOAD**

Do not use pump as a support for piping. Do not mount expansion joints, unless authorized by Flowserve in writing, so that their force, due to internal pressure, acts on the pump flange.

CAUTION **ENSURE CORRECT LUBRICATION**

(See section 5, Commissioning, startup, operation and shutdown.)

CAUTION **START THE PUMP WITH OUTLET VALVE PART OPENED**

(Unless otherwise instructed at a specific point in the user instructions.)

This is recommended to minimize the risk of overloading and damaging the pump motor at full or zero flow. Pumps may be started with the valve further open only on installations where this situation cannot occur. The pump outlet control valve may

OFFICIAL COPY - 001.39621.000073 - FB001 - 01 - Approved(A) - - - 07-Aug-2013 09:18 AM

need to be adjusted to comply with the duty following the run-up process. (See section 5, Commissioning Start-Up, Operation and Shutdown.)

CAUTION **NEVER RUN THE PUMP DRY**

CAUTION **INLET VALVES TO BE FULLY OPEN WHEN PUMP IS RUNNING**
Running the pump at zero flow or below the recommended minimum flow continuously will cause damage to the seal.

CAUTION **DO NOT RUN THE PUMP AT ABNORMALLY HIGH OR LOW FLOW RATES**
Operating at a flow rate higher than normal or at a flow rate with no backpressure on the pump may overload the motor and cause cavitation. Low flow rates may cause a reduction in pump/bearing life, overheating of the pump, instability and cavitation/vibration.

DANGER **NEVER DO MAINTENANCE WORK WHEN THE UNIT IS CONNECTED TO POWER**

HAZARDOUS LIQUIDS
When the pump is handling hazardous liquids care must be taken to avoid exposure to the liquid by appropriate sitting of the pump, limiting personnel access and by operator training. If the liquid is flammable and/or explosive, strict safety procedures must be applied.

Gland packing must not be used when pumping hazardous liquids.

FLUORO-ELASTOMERS (When fitted.)
When a pump has experienced temperatures over 250℃ (482℉), partial decomposition of fluoro-elastomers (e.g. Viton) will occur. In this condition these are extremely dangerous and skin contact must be avoided.

HANDLING COMPONENTS
Many precision parts have sharp corners and the wearing of appropriate safety gloves and equipment is required when handling these components. To lift heavy pieces above 25 kg (55 lb.) use an appropriate crane for the mass and in accordance with current local regulations.

Guards must not be removed while the pump is operational

THERMAL SHOCK
Rapid changes in the temperature of the liquid within the pump can cause thermal shock, which can result in damage or breakage of components and should be avoided.

HOT (and COLD) PARTS
If hot or freezing components or auxiliary heating supplies can present a danger to operators and persons entering the immediate area action must be taken to avoid accidental contact. If complete protection is not possible, the machine access must be limited to maintenance staff only, with clear visual warnings and indicators to those entering the immediate area. Note: bearing housings must not be insulated and drive motors and bearings may be hot.

If the temperature is greater than 68℃ (154℉) or below 5℃ (41℉) in a restricted zone, or exceeds local regulations, action as above shall be taken.

1.6.4 Products used in potentially explosive atmospheres

Ex Measures are required to:

- Avoid excess temperature
- Prevent build up of explosive mixtures
- Prevent the generation of sparks
- Prevent leakages
- Maintain the pump to avoid hazard

The following instructions for pumps and pump units when installed in potentially explosive atmospheres must be followed to help ensure explosion protection. Both electrical and non-electrical equipment must meet the requirements of European Directive 94/9/EC.

1.6.4.1 Scope of compliance

Ex Use equipment only in the zone for which it is appropriate. Always check that the driver, drive coupling assembly, seal and pump equipment are suitably rated and/or certified for the classification of the specific atmosphere in which they are to be installed.

Where Flowserve has supplied only the bare shaft pump, the Ex rating applies only to the pump. The party responsible for assembling the pump set shall select the coupling, driver and any additional

OFFICIAL COPY - 001.39621.000073 - FB001 - 01 - Approved(A) - - - 07-Aug-2013 09:18 AM

equipment, with the necessary CE Certificate/ Declaration of Conformity establishing it is suitable for the area in which it is to be installed.

The output from a variable frequency drive (VFD) can cause additional heating affects in the motor and so, for pumps sets with a VFD, the ATEX Certification for the motor must state that it is covers the situation where electrical supply is from the VFD. This particular requirement still applies even if the VFD is in a safe area.

1.6.4.2 Marking

An example of ATEX equipment marking is shown below. The actual classification of the pump will be engraved on the nameplate.

Ex II 2 GD c 135 ℃ (T4)

Equipment Group
I = Mining
II = Non-mining
Category
2 or M2 = High level protection
3 = normal level of protection

Gas and/or Dust
G = Gas; D= Dust

c =Constructional safety
(In accordance with En 13463-5)
Maximum surface temperature (Temperature Class)
(See section 1.6.4.3.)

1.6.4.3 Avoiding excessive surface temperatures

Ex ENSURE THE EQUIPMENT TEMPERATURE CLASS IS SUITABLE FOR THE HAZARD ZONE

Pumps have a temperature class as stated in the ATEX Ex rating on the nameplate. These are based on a maximum ambient of 40℃ (104℉); refer to Flowserve for higher ambient temperatures.

The surface temperature on the pump is influenced by the temperature of the liquid handled. The maximum permissible liquid temperature depends on the temperature class and must not exceed the values in the table that follows.

The temperature rise at the seals and bearings and due to the minimum permitted flow rate is taken into account in the temperatures stated.

Temperature class to EN 13463-1	Maximum surface temperature permitted	Temperature limit of liquid handled (* depending on material and construction variant - check which is lower)
T6	85℃ (185℉)	Consult Flowserve
T5	100℃ (212℉)	Consult Flowserve
T4	135℃ (275℉)	115℃ (239℉) *
T3	200℃ (392℉)	180℃ (356℉) *
T2	300℃ (572℉)	275℃ (527℉) *
T1	450℃ (842℉)	400℃ (752℉) *

The responsibility for compliance with the specified maximum liquid temperature is with the plant operator.

Temperature classification “Tx” is used when the liquid temperature varies and the pump could be installed in different hazardous atmospheres. In this case the user is responsible for ensuring that the pump surface temperature does not exceed that permitted in the particular hazardous atmosphere.

If an explosive atmosphere exists during the installation, do not attempt to check the direction of rotation by starting the pump unfilled. Even a short run time may give a high temperature resulting from contact between rotating and stationary components.

Where there is any risk of the pump being run against a closed valve generating high liquid and casing external surface temperatures it is recommended that users fit an external surface temperature protection device.

Avoid mechanical, hydraulic or electrical overload by using motor overload trips, temperature monitor or a power monitor and make routine vibration monitoring checks.

In dirty or dusty environments, regular checks must be made and dirt removed from areas around close clearances, bearing housings and motors.

1.6.4.4 Preventing the build up of explosive mixtures

Ex ENSURE THE PUMP IS PROPERLY FILLED AND VENTED AND DOES NOT RUN DRY

Ensure the pump and relevant suction and discharge pipeline system is totally filled with liquid at all times during the pump operation, so that an explosive atmosphere is prevented. In addition it is essential to make sure that seal chambers, auxiliary shaft seal systems and any heating and cooling systems are properly filled. If the operation of the system cannot avoid this condition the fitting of an

OFFICIAL COPY - 001.39621.000073 - FB001 - 01 - Approved(A) - - - 07-Aug-2013 09:18 AM

appropriate dry run protection device is recommended (e.g. liquid detection or a power monitor).

To avoid potential hazards from fugitive emissions of vapor or gas to atmosphere the surrounding area must be well ventilated.

1.6.4.5 Preventing sparks

Ex To prevent a potential hazard from mechanical contact, the coupling guard must be non-sparking and anti-static for Category 2.

To avoid the potential hazard from random induced current generating a spark, the earth contact on the baseplate must be used.

Avoid electrostatic charge: do not rub non-metallic surfaces with a dry cloth; ensure cloth is damp.

The coupling must be selected to comply with 94/9/EC and correct alignment must be maintained.

1.6.4.6 Preventing leakage

Ex The pump must only be used to handle liquids for which it has been approved to have the correct corrosion resistance.

Avoid entrapment of liquid in the pump and associated piping due to closing of suction and discharge valves, which could cause dangerous excessive pressures to occur if there is heat input to the liquid. This can occur if the pump is stationary or running.

Bursting of liquid containing parts due to freezing must be avoided by draining or protecting the pump and ancillary systems.

Where there is the potential hazard of a loss of a seal barrier fluid or external flush, the fluid must be monitored.

If leakage of liquid to atmosphere can result in a hazard, the installation of a liquid detection device is recommended.

1.6.4.7 Maintenance to avoid the hazard

Ex CORRECT MAINTENANCE IS REQUIRED TO AVOID POTENTIAL HAZARDS WHICH GIVE A RISK OF EXPLOSION

The responsibility for compliance with maintenance instructions is with the plant operator.

To avoid potential explosion hazards during maintenance, the tools, cleaning and painting materials used must not give rise to sparking or adversely affect the ambient conditions. Where there is a risk from such tools or materials, maintenance must be conducted in a safe area.
It is recommended that a maintenance plan and schedule be adopted. (See section 6, Maintenance).

1.7 Safety labels

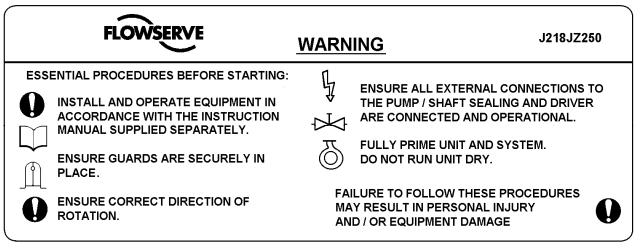

Oil lubricated units only:

1.8 Specific machine performance

For performance parameters see section 10.3.
When the contract requirement specifies these to be incorporated into User Instructions these are included here. Where performance data has been supplied separately to the purchaser these should be obtained and retained with these User Instructions if required.

1.9 Noise level

Attention must be given to the exposure of personnel to the noise, and local legislation will

OFFICIAL COPY - 001.39621.000073 - FB001 - 01 - Approved(A) - - - 07-Aug-2013 09:18 AM

define when guidance to personnel on noise limitation is required, and when noise exposure reduction is mandatory. This is typically 80 dBA.

The usual approach is to control the exposure time to the noise or to enclose the machine to reduce emitted sound. You may have already specified a limiting noise level when the equipment was ordered, however if no noise requirements were defined, then machine above a certain power level will exceed 80 dBA. In such situations consideration must be given to the fitting of an acoustic enclosure to meet local regulations.

Pump noise level is dependent on a number of operational factors, type of motor fitted, flow rate, pipework design and acoustic characteristics of the building. The WIK pump noise level is in the range of 85 to 95 dBA, this value is estimated and cannot be guaranteed.

The dBA values are based on the noisiest ungeared electric motors that are likely to be encountered. They are Sound Pressure levels at 1 m (3.3 ft) from the directly driven pump, for "free field over a reflecting plane". For estimating L_{wA} sound power level (re 1 *pW)* add 17 dBA to the sound pressure value.

If a noise study is required, please consult Flowserve or a noise specialist for assistance.

2 TRANSPORT AND STORAGE

2.1 Consignment receipt and unpacking

Immediately after receipt of the equipment it must be checked against the delivery/shipping documents for its completeness and that there has been no damage in transportation. Any shortage and/or damage must be reported immediately to Flowserve and must be received in writing within one month of receipt of the equipment. Later claims cannot be accepted.

Check any crate, boxes or wrappings for any accessories or spare parts that may be packed separately with the equipment or attached to sidewalls of the box or equipment.

Each product has a unique serial number. Checks that this number corresponds with that advised and always quote this number in correspondence as well as when ordering spare parts or further accessories.

Flowserve ships the pump mounted on its baseplate and soleplates, which is secured to a skid formed of heavy timbers, and when greater protection is necessary provides a shipping enclosure as well. If Flowserve provides the driver and the auxiliary equipment, they are shipped separately, but prepared and handled in the same manner as the pump. Shipments of pump and driver that terminate within the Continental Limits of the United States are protected by an open-frame. For some shipments into areas of extreme climatic condition a 6-mil (0.2 mm) clear, plastic cover over the unit provides additional protection.

2.1.1 Receipt inspection

Directly on receiving the shipment, it is important to perform a visual inspection of the entire pump unit (that is, motor, piping, vents, etc.,) as follows:

1) Check shipping enclosure for evidence of mishandling and clear plastic cover for tears, rips, and misuse; also verify presence of vapor-phase inhibitor.
2) Remove enclosure and cover, and check shipment for damage from collision and the elements.
3) Check auxiliary equipment and piping for distortion, breakage, gouges, and deep scratches.
4) Check pump, driver, and accessories for deep scratches and gouges; painted surfaces for damage.
5) Check for missing or disturbed flange covers and piping plugs.
6) Check equipment against manifest, and list shortages.

2.1.2 Inboard and outboard bearing shipping shims

CAUTION Do not rotate shaft with shipping shims installed. Failure to comply can result in damage to the shaft.
When the bearing housings bear identification that shipping shims are installed in place of tilting pad sleeve bearings (the bearings are boxed separately) remove the shipping shims and install bearings before rotating the shaft.

In general, care is to be taken when removing crating, coverings, and strapping in order not to damage any auxiliary equipment and/or the paint finish.

2.2 Handling

Boxes, crates, pallets or cartons may be unloaded using forklift vehicles or slings dependent on their size and construction.

OFFICIAL COPY - 001.39621.000073 - FB001 - 01 - Approved(A) - - - 07-Aug-2013 09:18 AM

2.3 Lifting

EQUIPMENT CAPACITY

Make sure that any equipment used to lift the pump or any other of its components is capable of supporting the total weight encountered. Make sure that all parts are properly rigged before attempting to lift.

TRAINED PERSONNEL

A crane must be used for all pump sets in excess of 25 kg (55 lb.). Fully trained personnel must carry out lifting, in accordance with local regulations. The driver and pump weights are recorded on their respective nameplates or massplates.

For weights of pump, driver, and cradle and soleplates, see the Outline Drawing Section 8.

CAUTION Parts can be damaged using the end of the pump shaft as lifting points. Avoid lifting the pump by nozzles or drip pockets; they are not stressed for the load.

Note: Whenever possible, rig spreader bars to prevent cables from cutting into equipment, thus avoiding any need to remove equipment to avoid damage. To lift the complete pump or the casing off the baseplate, place a single nylon lifting strap around the casing at the center of gravity.

2.3.1 Baseplate-mounted pump and driver

The four cardinal points for lifting the combined weight of baseplate and mounted pump and driver (or just the baseplate with pump) are located towards the ends of the baseplate. Their positions are physically defined by pipes that act as holders for lifting bars or lugs that afford use of clevises. These pipes or lugs are welded to the baseplate structure (see the Outline in 8). To set up for lifting the baseplate, proceed according to the following instructions.

1) Slide 75 mm (3 in.) bars which are long enough to extend well past sides of baseplate into pipes in baseplate or attach clevises to lifting lugs at each end of baseplate, whichever is applicable.
2) Attach cables to 75 mm (3 in.) bars or clevises in lugs at the four cardinal points.
3) Attach hoist to apparatus, take up slack in cables and check to see that cables do not cut into pump, driver, or attached equipment. If it appears that cable will cut into an item, stop hoist, and protect item with wood blocks, if possible; otherwise remove the item. See **Figure 2-1**: Baseplate mounted Pump & Driver Lifting.
4) Insure that hoist is over center of gravity of baseplate and that cables are not cutting into any item.
5) Hoist unit and dispose of it.

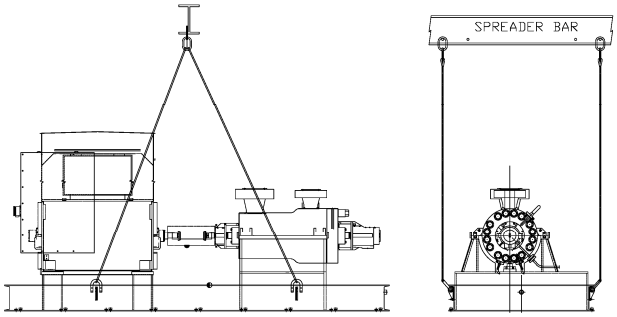

Figure 2- 1: Baseplate mounted Pump & Driver Lifting

Note: After the baseplate has been secured in position, verify that pump and equipment are undamaged and that items which had been removed for lifting the baseplate have been reinstalled (see section 4.6.2).

2.3.2 Soleplate-mounted barrel pump

There are two sets of four cardinal points that can be used to lift the combined weight of barrel pump, cradle and soleplates. Their positions are physically defined by holes in each corner of the cradle and by holes in each pump foot. Complete the set of instructions below (step 1 or step 2) that is applicable to your circumstance.

1) When using apparatus (see section 2.3) and four cardinal points of cradle to lift combined weight or to lift just pump and cradle:
   a) Install clevis in hole at each corner of cradle
   b) Attach chain (or cable) to each clevis
   c) Attach hoist to apparatus and take up slack
   d) Verify that cables will not cut into pump, lagging, piping, panels, etc.
   e) Establish that hoist is over center of gravity
   f) Hoist unit and dispose of it.

2) When using four cardinal points of pump, to lift combined weight, pump and cradle, or just pump:
   a) Remove lagging (if installed) exposing pump feet
   b) Install clevis in hole in each pump
   c) Attach hoist to cables and take up slack

OFFICIAL COPY - 001.39621.000073 - FB001 - 01 - Approved(A) - - - 07-Aug-2013 09:18 AM

d) Verify that cables will not cut into pump panels, piping, etc. Remove any items that will be damaged or protect items with wood blocks See **Figure 2-2**: Barrel Pump Lifting.
e) Establish that hoist is over center of gravity
f) Hoist unit (or pump) and dispose of it

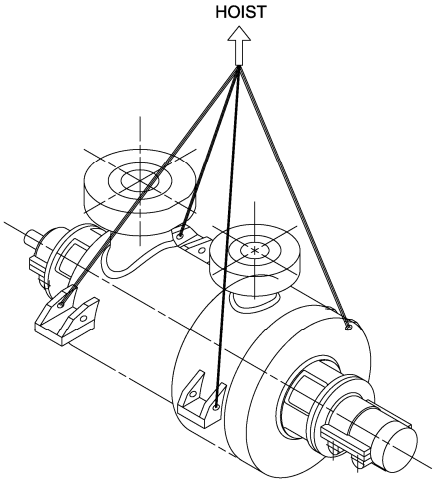

Figure 2- 2: Barrel Pump Lifing

Note: With pump and cradle mounted on soleplates (after soleplates have been secured to the foundation and, when applicable, grouted) see that pump and equipment are undamaged and that items that had been removed for lifting of pump have been reinstalled (see section 4.6.2).

2.3.3 Multistage internal assembly: Cartridge Barrel pump

CAUTION Do not lift internal assembly by shaft or by eyebolts in intermediate cover [1460]. Do not attempt to remove assembly from shipping crate without first removing sides and ends of container. Failure to comply could result in bent shaft.

When the multistage internal assembly or the full cartridge assembly is going to storage, handle it as described under section 2.4. Comply with the following procedure for uncrating and subsequent handling:

1) Remove sides and end of box.
2) Remove fastenings that hold assembly to box then remove plastic cover.
3) Place nylon strap or soft cable around the intermediate cover [1460], near center of assembly. The weight of the suction spacer casing normally causes the inboard half of assembly to be heavier than outboard half. If there is not enough space between intermediate cover [1460] and bottom of box for cable: (see Cartridge Assembly Lifting Points **Figure 2-3**).

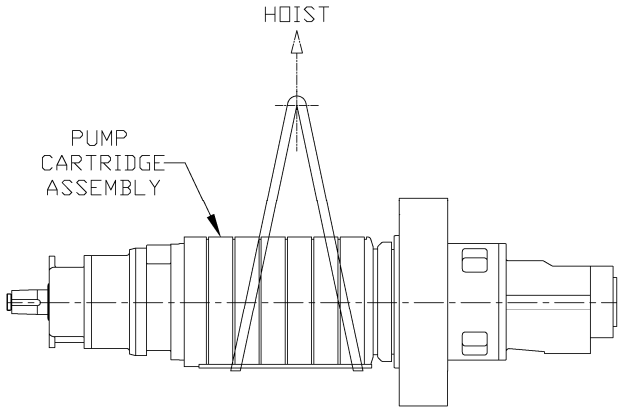

Figure 2- 3: Cartridge Assembly Lifting Points

a) Place another cable around balance drum [6230] and attach it to hoist
b) Lift end of assembly just enough to place cable around lifting point and install the lifting cable
c) Lower assembly onto lifting cable and remove cable from balance drum [6230]
d) Attach hoist to cable and start raising assembly
e) Verify that hoist is above center of gravity of assembly; if not, lower it and reset cable
f) Raise internal assembly from bottom of box and transport assembly.

2.3.4 Multistage rotor

When the multistage rotor is going to storage, handle it as described under section 2.4. Read the following precautions before uncrating and for subsequent handling.

1) Insure that load on pump shaft is equalized by using two pick-up points: one at each end of rotor normally between first and second impellers from end, depending on center of gravity one point might fall between second and third impellers on light end.

2) **CAUTION** Do not lift rotor:
   a) With one cable (or strap) at the balance point
   b) With strap around ends of shaft
   c) By one end
   d) When held in bind, however slightly, or
   e) With pick-up point inboard of third impeller from end.

OFFICIAL COPY - 001.39621.000073 - FB001 - 01 - Approved(A) - - - 07-Aug-2013 09:18 AM

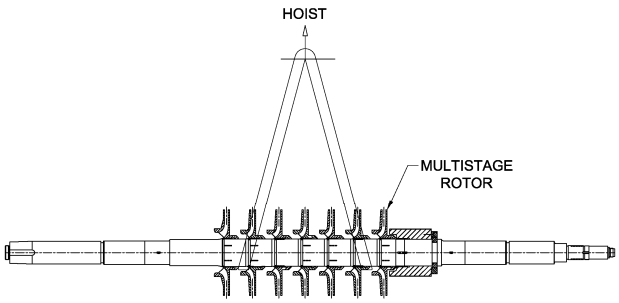

Figure 2- 4: Rotor Lifting Points

3) Adhere to the following task outline for uncrating and subsequent handling of the rotor:

   a) Remove sides and ends of box.
   b) Remove fastenings that hold rotor to box, and then remove plastic cover.
   c) Place a nylon strap or a soft cable around sleeve spacer or impeller hub between first and second impellers at each end of rotor (see Rotor Lifting Points **Figure 2-4**).
   d) Attach ends of nylon straps to hoist and verify that hoist is over center of gravity: if not, lower rotor and reposition strap on light end between second and third impellers (see Rotor Lifting Points **Figure 2-4**).
   e) Lift rotor straight up and place it in a stable, level location on supports from shipping box (or their equivalent).

2.3.5 Multistage shaft

To lift the bare multistage shaft from the shipping crate and for subsequent handling, proceed as follows:

CAUTION Lifting shaft by a single strap around its middle or only one end will cause bending of shaft.

1) Remove sides and ends of box; shaft must clear box without binding.
2) Remove fastenings that hold shaft to box, and then remove plastic cover.
3) Place nylon straps around shaft at points indicated by factory-installed markers. If no markers are present, measure 25 percent of total shaft length from each end of shaft and place nylon straps around shaft at these points.

Note: The shaft should be stored on wood in an indoor environment where the temperature does not fall below 16℃ (60℉), completely away from sunlight, and at least 100 mm (4 in.) above floor.

4) Use spreader bar to hold straps in place, attach hoist to center of bar, lift shaft, and place it:
   a) Either on wood supports of equal height that are not more than 600 mm (24 in.) apart and no further than 425 mm (17 in.) from shaft end
   b) Or in vertical position which is within 10 degrees of the perpendicular to the horizon

2.4 Storage

This section provides storage data for pumps and parts manufactured by Flowserve. Storage data for drivers and other auxiliary equipment may be found in section 10 of this manual.

2.4.1 Pump preservative standards

For domestic shipments the following standards, consistent with those recommended by the American Petroleum Institute for pumps, are applied:

1) All inner surfaces and internal parts of the pump casings and bearing housings are fully coated with a petroleum-based rust preventative, except as follows:
   a) If customer requires specific preservation, these specifications will be met
   b) Parts which are made of stainless steel are never coated
   c) Internal surfaces of pumps to be used in boiler feed service are not coated, unless the pump is to be stored for more than six months, in which case any internal components made of cast iron or carbon steel will be coated.
2) External surfaces are coated with a paint that combines a primer with a finish coat, unless otherwise specified by contract.
3) External surfaces of components required to be kept free of paint, such as the shaft and coupling, are coated with a petroleum-based rust preventative.
4) Glass surfaces such as gauge and indicator faces are masked.
5) Flanged openings are protected by wood or metal covers in accordance with the applicable edition of API 610.
6) All openings beveled for welding are protected by wood or metal covers attached and sealed with adhesive tape.
7) All threaded openings in the piping, pump casing, and auxiliary equipment are closed with threaded pipe plugs made of metal and suitable for permanent use.

For international shipments, crating and preservative measures are provided as specified by contract.

OFFICIAL COPY - 001.39621.000073 - FB001 - 01 - Approved(A) - - - 07-Aug-2013 09:18 AM

2.4.1.1 Precautions at job site

1) Do not allow the unit to rest in direct sunlight. Sunlight will cause rapid condensation of atmospheric moisture on the pump, resulting in corrosion of pump surfaces.
2) Some ventilation is required under the plastic covering around the pump. Do not seal the cover tight at any time.

2.4.1.2 Short-term indoor storage

Factory preservative measures will protect the pump for up to 6 months of indoor storage at the site.

2.4.1.3 Short-term outdoor storage

Factor preservative measures will protect the pump for up to 6 months of outdoor storage with the following precautions taken at the site:

1) Store the pump at least 150 mm (6 in.) above ground on wood blocks.
2) Cover the pump with a plastic cover with a thickness of at least 0.15 mm (0.006 in.) Seal the cover with tape, and cut ventilation holes about 13 mm (0.50 in.) diameter every 1.22 m (4 ft) along the baseplate (at a minimum, one hole at each end of the baseplate).

2.4.1.4 Long-term indoor storage

Factory preservative measures will protect the pump for long-term (greater than 6 months) storage with the following precautions taken at the site:

1) At the beginning of the storage period:
   a) Place 1 kg (2 lb.) of desiccant near the center of the pump unit, 0.5 kg (1 lb.) in each nozzle that is securely fastened to the flange cover, and 0.5 kg (1 lb.) in the lube oil reservoir
   b) Cover the pump with a plastic cover with a thickness of at least 0.15 mm (0.006 in.). Seal the cover with tape, and cut a ventilation holes about 13 mm (0.5 in.) diameter every 1.22 m (4 ft.) along the baseplate (at a minimum, one hole at each end of the baseplate)
2) Every 3 months check the desiccant and replenish as necessary.
3) Every 6 months:
   a) Inspect and recoat internal surfaces of bearing housings and all parts within the bearing housing
   b) Inspect and recoat the external unpainted surfaces of the pump, the shaft coupling and the internal surfaces of the pump
   c) Inspect accessible shaft seal parts for cleanliness and moisture

2.4.1.5 Long-term outdoor storage

The precautions for long-term outdoor storage are the same as for long-term indoor storage, with the following additional precautions taken at the site:

CAUTION Some mechanical seals may contain materials which can be damaged by oil, in which case the seal piping and seal housing should not be filled with oil (see mechanical seal instructions in section 10).

1) At the beginning of storage:
   a) Fill lube oil and seal flush piping with oil, unless the piping is made of stainless steel, or the specific piping arrangement makes it impossible to fill. It may be necessary to disconnect threaded or flanged piping from the pump to preserve it properly, in which case all openings which this creates should be covered. If the piping will not be filled, then oil should be poured into the seal housing through any convenient connection to preserve the seal faces.
   b) Store pump at least 150 mm (6 in.) above ground on wood blocks
   c) Provide a roof or shed to protect pump from direct sunlight and other elemental hazards
2) Every 6 months, in addition to the requirements listed under step 3 of section 2.4.1.4 above:
   a) If lube oil and seal piping and seal housing were previously filled with oil, drain and refill lube oil and seal flush piping with oil, and inject oil through flush connections onto mechanical seal faces

2.4.2 Rotor preservative standards

1) Rotors and complete internal assemblies are fully coated with a petroleum-based rust preventative.
2) Each assembly is secured in a wood box that is lined with plastic to form a vapor barrier envelope.
3) A 1 kg (2 lb.) bag of desiccant is placed near the center of the assembly.
4) The assembly is supported under its outside diameter on wood cradles placed inside the plastic lining.

CAUTION The Internal assembly or rotor should never be supported or lifted at the journals.

2.4.2.1 Rotor storage

Factory preservative measures will protect rotors and complete internal assemblies for up to 3 years under indoor storage conditions.

OFFICIAL COPY - 001.39621.000073 - FB001 - 01 - Approved(A) - - - 07-Aug-2013 09:18 AM

2.4.3 Depreserving

Note: It is recommended that a Flowserve service representative be employed to inspect any equipment stored for more than 12 months.

1) Clean petroleum-based preservative from all parts of pump by using a petroleum-based solvent such as kerosene or naphtha.
2) Depreserve bearing housings by performing the following:
   a) Remove bearings from housings
   b) Flush bearing housings and piping with clean lube oil and drain
   c) Clean and reinstall bearings
3) Drain oil from the mechanical seals and seal flush piping, then flush mechanical seals and seal flush piping with appropriate fluid until clean.
4) See section 5.7 for additional start-up information.

2.5 Recycling and end of product life

At the end of the service life of the product or its parts, the relevant materials and parts should be recycled or disposed of using an environmentally acceptable method and in accordance with local removed and disposed of in accordance with current local regulations. This also includes the liquids and/or gases that may be used in the "seal system" or other utilities.

Make sure that hazardous substances are disposed of safely and that the correct personal protective equipment is used. The safety specifications must be in accordance with the current local regulations at all times.

3 PUMP DESCRIPTION

This section describes the principal physical features of your multistage barrel pump, as manufactured by Flowserve. For an illustrative description of the physical features of your pump, see Flowserve drawings in the back of this manual; these drawings define your as built/as shipped pump. Although this section includes some description of equipment that is purchased from a vendor and furnished with the pump (notably the mechanical seal) as a rule, each vendor presents his own descriptive information, engineering drawings, installation instructions, etc., when it is necessary to familiarize operating and maintenance personnel with the particulars of his equipment (see section 8 and section 10).

3.1 Configurations

The cylindrical or barrel-like casing [1100] of your barrel pump is centerline-mounted. The casing houses a unitized internal assembly comprised of a rotor (essentially, a shaft [2100] with equally spaced impellers [2200] and a balance drum [6230]) and stationary inner casings: intermediate cover [1460] around each radial impeller, a suction spacer casing [1130] at the first stage of the pump and a discharge spacer casing-diffuser [1140] at the discharge stage of the pump. An assembly rail [9363] that fits across each casing holds them together for removal and installation of the internal assembly. A guide in the casing receives the assembly rail [9363]; rail and guide, together, keep the inner casings from rotating. There is a removable casing cover on the discharge or outboard end of the pump casing. And there is removable seal housing in the casing cover and the inboard end of the casing. A seal unit is attached to, or set in, each seal housing. Outside and at each end of the casing, a bearing supports the radial load of the shaft. In the same housing with the outboard radial bearing, there is a thrust bearing that takes the axial load of the rotor. (Lubricating oil for bearings must satisfy specific requirements; see section 5.2)

3.2 Name nomenclature

The pump nomenclature is:

6WIK1410 (Example Only)

The 6 is the pump discharge size
The WIK is pump type
The 14 is the nominal impeller diameter
The 10 is the number of stages

3.3 Design of major parts

3.3.1 Cartridge Assembly

The internal assembly, head, case end plate, seal units, and bearing housings form a cartridge assembly which is designed to be removed and installed as a unit, thereby decreasing the amount of time the pump will be out of service due to mechanical failure. Instructions on removal and installation of the cartridge assembly are contained in section 6.7 and section 6.9.

3.3.2 Intermediate cover diffuser

The machined diffuser is an integral part of the intermediate cover [1460]. This is necessary to prevent the diffuser from rotating. Moreover, a diffuser that is machined to the intermediate cover [1460] is considered by Flowserve to be inseparable.

OFFICIAL COPY - 001.39621.000073 - FB001 - 01 - Approved(A) - - - 07-Aug-2013 09:18 AM

3.3.3 Suction spacer casing and discharge spacer casing.

The suction spacer casing [1130] does not incorporate a diffuser. The discharge spacer casing [1140] does incorporate a diffuser in the same manner as the intermediate cover [1460] (see Intermediate cover diffuser above).

3.3.4 Wearing rings and bushings

A renewable wearing ring [1500] is fixed in each intermediate cover diffuser [1460], the suction spacer casing [1130], and the discharge spacer casing diffuser [1140]. A renewable bushing [1610] is fixed in each intermediate cover diffuser [1460] and the discharge spacer casing diffuser [1140]. These rings and bushings protect the intermediate covers and casings from the washing action that is generated by the skirt and hub of each impeller as they spin rapidly in the pumpage (or flow). The rings and bushings are surface-hardened.

3.3.5 Impellers

Impellers [2200] are keyed [6700.4] to the shaft [2100] with one or two keys and have an interference fit with the shaft. Because of hydraulic requirements for efficiency, the pattern of the pump suction impeller usually differs from the radial impellers at the other stages. Normally, the pump discharge impeller has the same pattern as the radial impellers of the intermediate stages. The impeller hubs and skirts are surfaced-hardened, or fitted with surfaced hardened wearing rings.

3.3.6 Bearings

The radial load on the shaft is carried by sleeve bearings [3020] and the axial thrust load is taken by a Kingsbury thrust bearing [3032].

3.3.7 Shaft seals

To prevent pumpage (or flow) from leaking around the shaft, your barrel pump is equipped with mechanical seals. For an illustration of the seals, see the seal manufacturer's drawing in section 10.

3.3.8 Lube oil system

Your pumps are equipped with a pressurized lube oil system. For detailed description, see section 10.

3.3.9 Seal piping

For a description of seal piping, see PIPING drawings in section 10.

3.3.10 Baseplates

The pump is factory mounted on a baseplate and its driver (if furnished by Flowserve) is mounted on a baseplate or soleplate (see Outline drawing in section 8)

3.3.11 Drivers

For a description of drivers furnished by Flowserve, see section 10.

3.3.12 Special tools

When a special tool is required for pump maintenance, repair, or overhaul and is ordered with your pump, it is normally described by Flowserve Product Engineering drawing in section 10. Its use is covered in the instructions for performing the particular task for which it is designed.

3.3.13 Interference fit.

These parts are designed for an interference fit with the shaft; that is, the parts are a few thousandth of an inch smaller than the shaft: impellers, balance drum, and thrust collar. When the parts are so designed, the fit is given in inches and millimeters in section 10.3 of this manual; appropriate handling procedures are given in section 6.

3.4 Performance and operating limits

Refer to section 10.3.

4 INSTALLATION

Poor location and use of inadequate standards for the preparation of the foundation adversely affect pump life. A good foundation is particularly important since it can be a primary factor in preventing vibration, a major cause of wear and failure of the pump.

Equipment operated in hazardous locations must comply with the relevant explosion protection regulations. See section 1.6.4

4.1 Location

When locating the pump, consideration should be given to the following factors that bear on its operation and maintenance.

1) Head, end, and side room necessary for overhaul, removal, and inspection; also space for maneuvering hoisting equipment.
2) Shortest practicable distance between source of liquid and suction flange on pump.
3) Sufficient net positive suction head (NPSH) at suction flange of pump.

OFFICIAL COPY - 001.39621.000073 - FB001 - 01 - Approved(A) - - - 07-Aug-2013 09:18 AM

4.2 Part assemblies

Note: In the context of this subsection the term "driver" applies to a motor, gear, steam turbine, fluid drive, clutch, and hydraulic power recovery turbine (HPRT). The term "turbine" is short for steam turbine; it does not apply to the HPRT.

This section describes the work that must be performed to assure that baseplates (or soleplates) are level. It also outlines the steps to be taken to assure alignment of multiple baseplates (or soleplates). The Outline drawing gives dimensions and any other references necessary for installation of baseplates and/or soleplates.

4.2.1 Leveling Tools and equipment

Besides hand tools, the tasks of leveling and aligning baseplates (or soleplates) require:

1) Lifting equipment, including plastic-coated soft cables
2) Precision straight edge
3) Threaded leveling screws for leveling baseplate (if baseplate is so equipped) and/or small metallic shim blocks, each approximately 1 inch (25 mm) thick, one for each bolt hole in baseplate or soleplates
4) Precision machinist level or equivalent tool
5) Optical alignment equipment such as an alignment laser or jig transit that is capable of measuring to 0.001 in (0.02 mm)
6) Dial indicator
7) Indicator bracket

4.2.2 One baseplate for entire train of units

Where your baseplate is designed with two or more sets of mounting pads which accommodate the entire train of units (for example, pump, driver, and fluid drive) the manufacturing process for the baseplate ensures alignment of every set of mounting pads; thus, you need only level such a baseplate on its foundation as directed by the procedure below, anchor it down, and you are ready to grout.

Before beginning the leveling work as outlined below, you must remove all units, except the pump, from their mounting pads. These pads must be vacant while both leveling and grouting the baseplate. Among the illustrations that highlight the instructions, there is the baseplate top view figure, which shows the pump mounted and two sets of mounting pads A-B and C-D vacant; a typical example of a baseplate that is ready for leveling. Of course, your baseplate (see Outline drawing in section 8.) could include an additional set of pads or where only the driver and pump make up the entire train; your baseplate would be less the innermost set of pads, which are labeled C-D in the baseplate top view figure. Regardless of how many sets of mounting pads your baseplate may have, the leveling procedure is essentially the same. Proceed as follows:

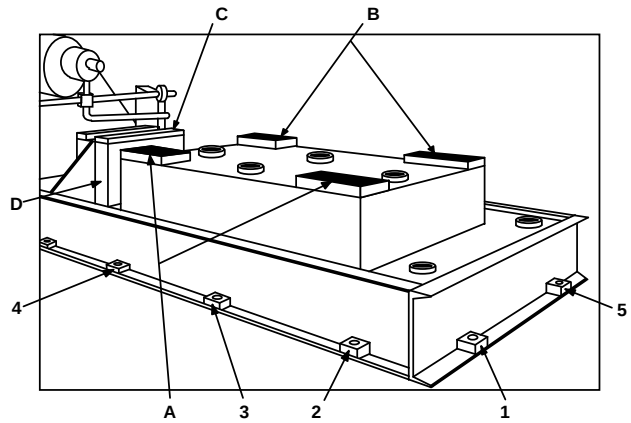

Figure 4- 1 : Baseplate Top View (Typical)

1) Verify that your foundation as described under section 4.3, has had ample curing time; otherwise it may not support weight of pump train.
2) To assure sufficient grouting, provide for a minimum space of 25 mm (1 in.) between baseplate and foundation by placing shim blocks adjacent to each foundation bolt hole or underneath each leveling screw in the baseplate.
3) Set baseplate with pump on shims and/or leveling screws, bending anchor bolts as necessary to align them with holes in baseplate.

Note: Pump feet and their hold down bolts are inaccessible with lagging in place.

4) Remove insulation covers, if installed, from top half of pump.
5) To eliminate any torsional affect that the pump might exert on baseplate, loosen hold down bolts at each pump foot.
6) Thoroughly clean exposed edges of pad at each pump foot and surface of all mounting pads.
7) Level baseplate using optical alignment equipment or machinist level on shims and/or leveling screws within the required leveling gradient of 0.05 mm per 305 mm (0.002 in. per 12 inches). If a machinist level is used, ensure that the baseplate is leveled lengthwise and crosswise at both ends. Then tighten down anchor nuts and recheck for nominal gradient. If

OFFICIAL COPY - 001.39621.000073 - FB001 - 01 - Approved(A) - - - 07-Aug-2013 09:18 AM

baseplate is not level, loosen anchor nuts, re-level it, retighten nuts, and recheck for nominal gradient. Continue this process until the baseplate is anchored and level.

4.2.3 Baseplates in train

Where driver, pump, and any other unit that couples in train with the pump will be mounted on separate baseplates, you must align their common centerlines before grouting them. You must also precisely level them. Failure to either properly align or level the baseplates will make shaft alignment difficult, if not impossible, without breaking up the grout; a laborious and time consuming task. Please refer to the initial alignment section 4.5 for specifics.

4.3 Foundation

The foundation may consist of any material sufficiently heavy to afford a permanently rigid support to the full area of the baseplate or soleplate and to absorb all normal strains and shocks that may be imposed in service. Points that should be considered when preparing a foundation are as follows:

1) A concrete foundation built up from solid ground has proven the most satisfactory.
2) A minimum space of 25 mm (1 in.) should be left between the underside of the baseplate flange and the top of the foundation for grouting.
3) A concrete foundation should be poured early to allow ample curing time before bearing the pump load.
4) Foundation bolts must fit the holes and the locations in the baseplate according to Outline drawing in section 8. This may be accomplished by constructing a wooden template, which matches the dimensions of the Outline drawing in section 8. This template will hang the foundation bolts in their proper positions and prevent them from moving while the foundation is poured.
5) A pipe sleeve with a diameter approximately 3 times larger than the foundation bolt diameter and 10 to 15 times the bolt diameter in length should ring each bolt. After the concrete is poured, the pipe sleeves are held firmly in place but the bolts may be bent to conform to the holes in the baseplate. For detailed illustration of this installation, see **Figure 4-2**.
6) A pump unit to be anchored to steel work or similar structure should bear directly on support beams or walls and be supported so as to prevent distortion of the baseplate and misalignment due to yielding or springing of either the structure or the baseplate.

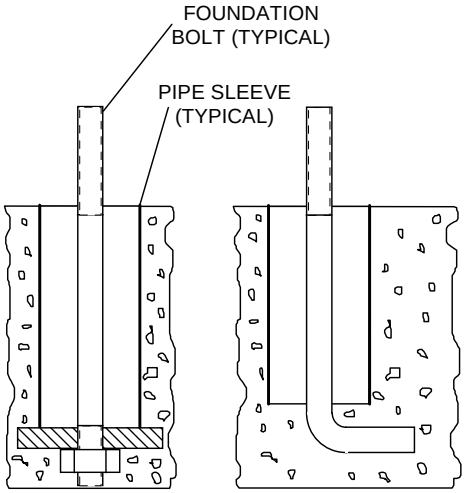

Figure 4- 2 : Foundation Bolt

4.3.1 Level the baseplate

If your pump train is supplied with soleplates, there are some very important considerations in leveling and alignment. When leveling soleplates the main points to remember are:

1) The Outline drawing in section 8 illustrates the dimensions and placement of the baseplates.
2) Anchor bolts and nuts must be recessed in the soleplates as shown on the Outline drawing in section 8
3) The foundation such as described under section 4.3, requires ample curing time before it can support the weight of soleplates and pump.
4) A minimum space of 25 mm (1 in.) is required between soleplate and foundation to assure sufficient grouting. This may be obtained by placing shims adjacent to each foundation bolt hole or beneath each leveling screw in the baseplate.
5) Baseplates must be precisely leveled in a common plane, both lengthwise and crosswise, using a machinist level or a more precision tool.
6) Ensure that initial alignment steps 8 through 10 under section 4.5.6 [Procedure] below are complete before grouting.

4.4 Grouting

4.4.1 Grouting with cement and sand

A suitable grout mixture consists of one part Portland cement and one part coarse, clean sand by weight. Generally 6 to 8 liters (1.75 to 2 gal.) of clean water for each 45 kg (100 lb.) of mix is sufficient to make the mix placeable. The actual amount of water required to make a placeable mix may vary slightly. Use of the following procedure will help to assure proper grouting.

OFFICIAL COPY - 001.39621.000073 - FB001 - 01 - Approved(A) - - - 07-Aug-2013 09:18 AM

1) According to your installation, verify:
   a) That soleplates have been separated from cradle and pump, leveled, and aligned as described in section 4.5
   b) That driving units (i.e., motor, fluid drive, gear, clutch, etc.) have been removed from baseplate, which has been leveled (aligned too, if necessary) as described in section 4.5
2) Build a suitable wooden form similar to that illustrated by **Figure 4-3** Grouting Baseplates or Soleplates below. To keep form from floating, anchor securely and shore around the applicable plate.

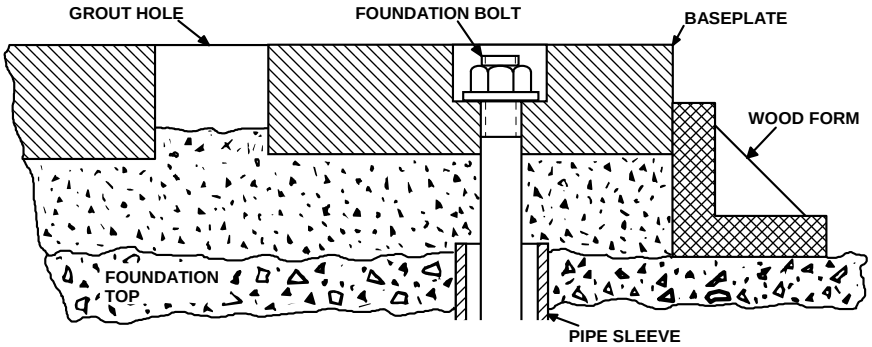

Figure 4- 3 : Grouting Baseplates or Soleplates

3) Remove water and waste material that may have collected in the foundation bolt holes.
4) Clean off and dampen foundation slab.
5) Wrap cloth around leveling screws to cover threads, thereby leaving space for loosening the leveling screws.

Note: . Proper practice is to begin grouting lowest compartment, which is normally at pump end of baseplate, and progress in order to highest compartment, which is normally at driver end of baseplate.

6) Pour grout through grout holes in baseplate (soleplates too, where holes have been provided) and working from sides, push grout between foundation and baseplate (or soleplates).
7) Work and rod grout until entire space between top of foundation and top of grout holes is full and absolutely free of air pockets.
8) Allow grout to cure until it can support a working pump without cracking or breaking up, then:
   a) Remove cloth from around foundation bolts, back off leveling screws until completely free of baseplate (or soleplates) and tighten hold down nuts on foundation bolts or
   b) Leave leveling blocks and shims in place and tighten hold down nuts on foundation bolts, whichever is applicable.
9) Verify that baseplate is rigidly grouted by tapping on drip plate with steel rod and listening to the resound: a solid thud indicates a rigid grout; a drum-like hollow sound indicates a void and this must be filled with epoxy grout. To fill a void, proceed as follows:
   a) Drill and tap 6.4 mm (0.25 in.) hole (one that is compatible with grease-type fitting, for example, a Zerk fitting) wherever there is a void.
   b) Install fitting; then using a compatible handgun filled with epoxy grout, pump the void full.
   c) Again tap drip plate and listen for resound: for drum-like hollow resound, then repeat the two previous steps above as required to drill and fill all void.
   d) Remove fittings, plug holes with epoxy, and level off epoxy.

4.4.2 Grouting with epoxy

To grout the soleplates or baseplate using an epoxy grout, proceed as follows:

Note: In grouting with epoxy, it is essential that you apply the epoxy in accordance with the epoxy manufacturer's instructions.

1) Complete steps 1 through 3 under section 4.4.1 above.

OFFICIAL COPY - 001.39621.000073 - FB001 - 01 - Approved(A) - - - 07-Aug-2013 09:18 AM

2) Clean off foundation slab and follow epoxy manufacturer's instructions for any further preparation of the slab.
3) Wrap cloth around leveling screws to cover threads, thereby leaving space for loosening the leveling screws.

Note: Proper practice is to begin grouting lowest compartment, which is normally at pump end of baseplate, and progress in order to highest compartment, which is normally at driver end of baseplate.

4) In accordance with the epoxy manufacturer's instructions apply grout through grout holes in baseplate (soleplates too, where holes have been provided).
5) Before epoxy grout is set but after it is apt to flow, remove cloth from around foundation bolts, exposing threads.
6) Allow epoxy grout to set for period specified by epoxy manufacturer, then:
   a) Remove cloth from around foundation bolts, back off leveling screws until completely free of baseplate (or soleplates) and tighten hold down nuts on foundation bolts or
   b) Leave leveling blocks and shims in plate and tighten hold down nuts on foundation bolts, whichever is applicable.
7) Complete step 9 under section 4.4.1 above.

4.5 Initial alignment

4.5.1 Alignment tools and equipment

In addition to hand tools, the pump-to-driver alignment task requires:
1) Hoisting equipment
2) Two dial indicators
3) Double dial indicator bracket
4) Precision machinist level or equivalent tool

4.5.2 Alignment accuracy

The alignment of the pump and driver must be accurate. A flexible coupling is not a universal joint and must be aligned with the same care and accuracy as a rigid coupling. Misalignment will cause noise, shaft vibration, hot bearings, and rapid wear of bearings, bushings, rings and packing, and may cause the rotating element to seize. To assure that the pump and driver are in accurate alignment, their shafts must be checked for alignment and corrected, if necessary, and the hold down bolts tightened under these circumstances:

1) After the baseplate or soleplate(s) has been grouted in at its permanent installation.
2) After connecting the plant's piping to the pump.
3) After the first run, with the pump still hot from several hours of operation, with incoming liquid at its normal temperature, and before the pump goes on line for an extended period.
4) After the first slight increase in vibration appears following a long period in service or after a sudden increase in vibration.

4.5.3 Reasons for field alignment of pump and driver

Although in some cases Flowserve does ship the driver mounted on the baseplate with the pump, the driver shaft is not precisely aligned with the pump shaft; thus, such shipments, as well as those where pump and driver are packed separately, must be field-aligned before operating the pump. Flowserve's principal reasons for not factory-aligning the pump and driver are:

1) Driver mount pads should be empty for leveling baseplate (see section 4.3.1).
2) Distortion of the baseplate may occur as a result of handling during shipment or unloading.
3) Minor distortion in the baseplate may occur when it is bolted to its own foundation, which in turn may produce some misalignment between pump and driver if they are aligned and coupled before the baseplate is leveled and anchored on its foundation.
4) Alignment adjustment may be required to compensate for the strain on the pump and the baseplate that may be imposed by loads transmitted from the plant's system via the suction and discharge piping.
5) The factory alignment of a pump would be performed at an average temperature of 24℃ (75℉). Since operation of a pump at a different temperature would cause alignment changes due to thermal effects on the pump's pedestal position, final alignment must be made with the pump and driver at their actual operating temperature.

4.5.4 Alignment preconditions

To make the alignment tasks easier and to prevent pump and driver from working into a state of misalignment, before starting the tasks, you should make certain:

1) That baseplate or soleplate(s) is level and anchored (see section 4.3.1).
2) That baseplate or soleplate(s) is properly grouted (see section 4.4).
3) That cradle, where applicable, has been leveled to soleplate, using vertical leveling screws and precision machinist level or equivalent tool.

4) That pump hold down bolts are tight.
5) That suction and discharge piping is not connected to pump until after completion of initial cold alignment;
6) That the pads on baseplate or soleplate(s) and driver feet are thoroughly cleaned.

Note: For installation of keyless coupling using hydraulic pressure, see the coupling installation drawing in the back of this manual; or refer to the coupling manufacturer's instructions in section 10.

4.5.5 Installing coupling

For an outline of coupling removal and installation tasks, see section 6.7.2 and section 6.9.8.

4.5.6 Alignment procedure

You should begin work by aligning the centerline of the baseplate of the principal unit, usually the turbine or the high-speed pump, with your plant's benchmarks, thereby establishing a common centerline with which the centerlines of the other baseplates that are in train may be. Proceed with your aligning and leveling work as follows:

1) Verify that your foundations as described under section 4.3 have had ample curing time; otherwise they may not support weight of baseplates and operating units.
2) To assure sufficient grouting, provide for a minimum space of 25 mm (1 in.) between baseplates and their foundations by placing shims adjacent to each foundation bolt hole or beneath each leveling screw.
3) Set all baseplates on shims or leveling screws, bending anchor bolts as necessary to align them with holes in baseplates.

Note: Pump feet and their hold down bolts are inaccessible with lagging in place.

4) Remove lagging, if installed, from top of pump; also, to eliminate any torsional affect that the pump might exert on baseplate, loosen hold down bolts at each pump foot.
5) Thoroughly clean surfaces of all mounting pads including exposed edges of pads at each pump foot.

Note: If foundation bolts prevent precise alignment, relocate them to ensure that the centerline of every baseplate will match the common centerline; also, before making a final check of the centerlines for exact match, the baseplate should be almost level.

6) Using optical alignment equipment, align centerline of every baseplate within 0.38 mm (0.015 in.) of a common centerline.
7) Level each baseplate using optical alignment equipment or machinist level on shims and/or leveling screws within the required leveling gradient of 0.05 mm per 305 mm (0.002 in. per 12 inches). If a machinist level is used, ensure that the baseplate is leveled lengthwise and crosswise at both ends. Then tighten down anchor nuts and recheck for nominal gradient. If baseplate is not level, loosen anchor nuts, re-level it, retighten nuts, and recheck for nominal gradient. Continue this process until each baseplate is anchored and level.
8) Set units (that is, driver, pump, etc.) in place on baseplates (or soleplates) and loosely install enough hold down bolts in each unit to ensure that all holes in units and baseplates (or soleplates) line up.
9) Install half-couplings on shafts.

Note: Check hubs for run out or possible bent shaft conditions before attempting alignment of units.

10) Check alignment of all connectable shafts as described by the following steps.
    a) Determine the distance from the bracket mounting point to the indicator reading point.
    b) Securely attach the bracket to a length of rigid pipe, and install the indicator at the distance determined in the previous step a above. (See **Figure 4-4** Determining Bar Sag below)

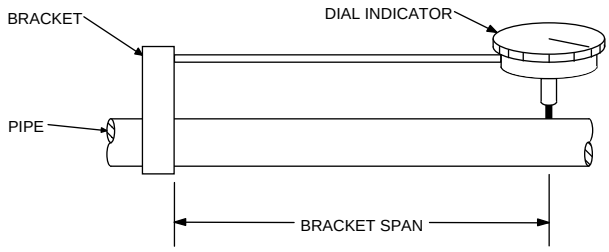

Figure 4- 4 : Determining Bar Sag

    c) Hold the pipe with the indicator facing up and set at "0". Without touching bracket, rotate the pipe 180° so that the indicator is facing down. Read the indicator and record the reading. This is the amount of bar sag.
    d) Rotate the pipe again so that indicator is facing up. It must return to "0".
    e) Repeat the two previous steps c and d above to confirm reading.

OFFICIAL COPY - 001.39621.000073 - FB001 - 01 - Approved(A) - - - 07-Aug-2013 09:18 AM

Note: All indicator readings must be taken on the periphery or rim of the coupling hub or shaft, and recorded as viewed from the fixed unit (see **Figure 4-5** Alignment Orientation).

f) Attach bracket to the movable unit coupling hub or shaft. (See **Figure 4-6** Dial Indicator Setup For Alignment below) Take the readings on the fixed unit coupling hub or shaft.
g) Set the bar sag amount determined in steps a through e above into the indicator as a plus amount (example: an indicated 0.08mm (-0.003 in.) would be set in as a +0.08mm (+0.003 in.)) while in the upright (12 o'clock) position.
h) Rotate both shafts 180°(to the 6 o'clock position) and record indicator reading.
i) Repeat steps g and h to verify accuracy.
j) Set the bracket to the horizontal (9 o'clock) position and set indicator to "0". Bar sag is not applicable in the horizontal position.

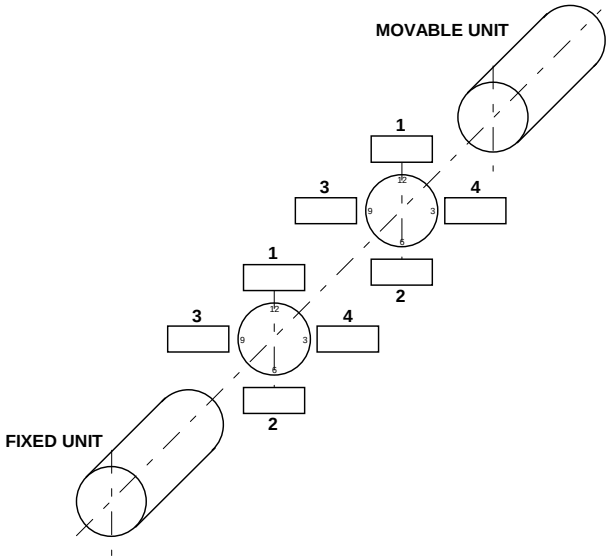

Figure 4- 5 : Alignment Orientation

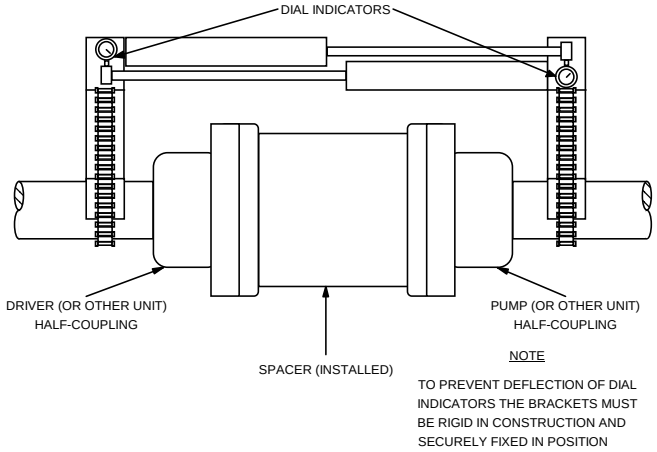

Figure 4- 6 : Dial Indicator Setup for Alignment

k) Rotate both shafts 180°(to the 3 o'clock position) and record indicator reading.
l) Repeat steps j and k to verify accuracy.
m) Remove bracket from movable unit coupling hub and attach to fixed unit coupling hub.
n) Repeat steps g through l with readings taken on movable unit.
o) Check your readings; misalignment of connectable shafts must not exceed 0.25 mm (0.01 in.) in either the horizontal or the vertical plane, before grouting; thus, if total indicator reading (TIR) between 6 o'clock and 12 o'clock points (that is, in the vertical plane) or TIR between 3 o'clock and 9 o'clock points (that is, in the horizontal plane) exceeds maximum allowable, you should:
   - Verify that there is enough clearance between hold down bolts and holes to permit correction of misalignment in horizontal plane (TIR should be rechecked) and ensure that shimming will permit correction in the vertical plane; but, if these are inconclusive:
   - Remove every unit but pump from baseplates (or soleplates) and repeat steps 6 through 10 as necessary to ensure alignment.

11) Remove all units from baseplates.
12) Grout baseplates as described under section 4.4.

⚠ ***Do not attempt any maintenance, inspection, repair or cleaning in the vicinity of rotating equipment. Such action could result in injury to operating personnel.***

OFFICIAL COPY - 001.39621.000073 - FB001 - 01 - Approved(A) - - - 07-Aug-2013 09:18 AM

Before attempting any inspection or repair on the pump the driver controls must be in the "off" position, locked and tagged to prevent restarting equipment and injury to personnel performing service on the pump.

4.6 Piping

4.6.1 Recommendations and notes for piping connects

When installing suction and discharge piping, every precaution must be taken to prevent pipe scale, welding shot, or other foreign material in the pipe from entering the pump. Neglect of these precautions will result in damage to pump parts, and damage to discharge, gate and check valves or instruments located in the discharge or outlet piping. When installing piping, Flowserve recommends:

1) That the inside of the pipe be thoroughly cleaned;
2) That as the line is erected, a swab fitting the entire cross section of the pipe be pulled through each section to ensure the removal of scale or other foreign material;
3) That before bolting or welding piping to the pump, the complete piping is checked to ensure:

   a) That the piping slopes in the correct direction;
   b) That no high spots or pockets are present in which air or vapor can collect, as shown by the **Figure 4-7** Vapor Pockets below;
   c) That piping supports, valves, and fittings are properly located, and all eccentric reducers or increasers are properly installed
   d) That the piping is installed to avoid excessive loads on the pump nozzles from poor alignment of piping or improper location of piping anchors

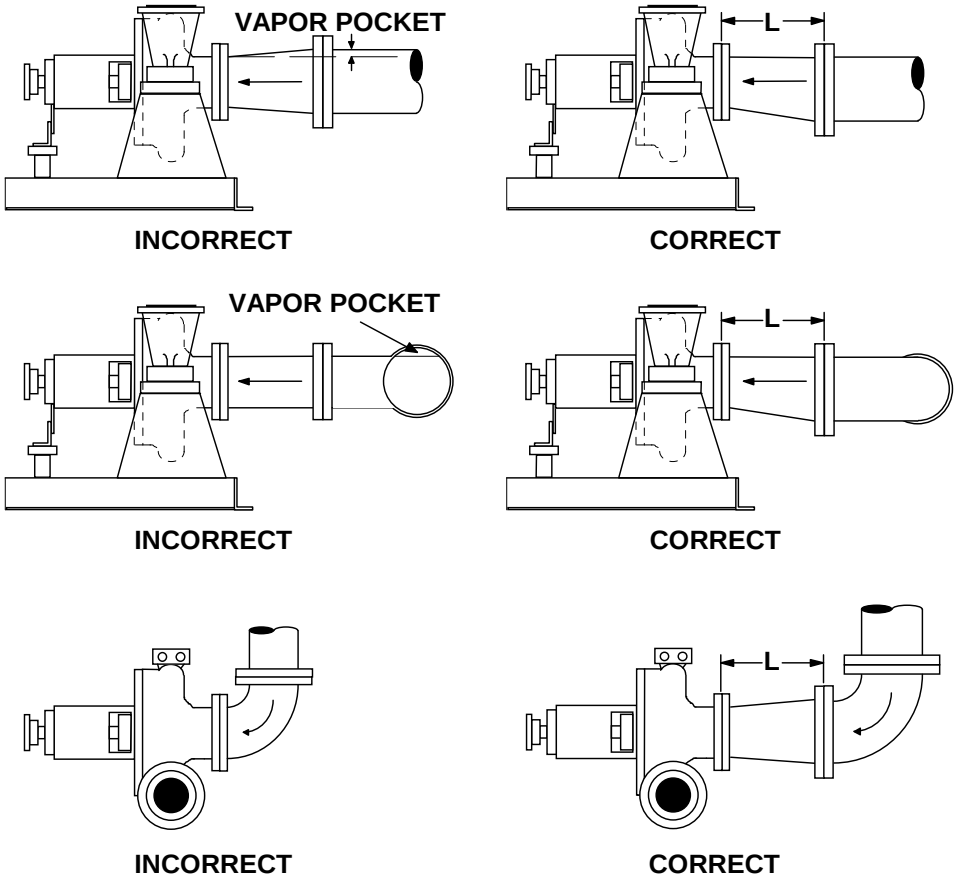

Dimension L is to be at least twice the maximum pipe diameter

Figure 4- 7 : Vapaor Pockets

OFFICIAL COPY - 001.39621.000073 - FB001 - 01 - Approved(A) - - - 07-Aug-2013 09:18 AM

4.6.1.1 Connecting to flanged nozzles

The face of pipe flanges must be parallel and flush with the suction and discharge nozzles on the pump casing. Piping must not be pulled into position with flange bolts. Additionally, Flowserve recommends the following:

1) Do not weld on piping while it is bolted to casing. If welding is necessary, disconnect line at casing and block opening to prevent welding shot from entering pump.
2) Provide a temporary screen similar to that of the **Figure 4-8** Suction Piping Temporary Screen below made from No. 14 mesh stainless steel wire backed with 16-gauge perforated plate, at or near the suction nozzle of the pump (the inlet nozzle of the HPRT). The purpose of installed the screen is to catch all welding beads, scale, or other foreign material before it enters the pump. It should remain in the line until the system is considered clean.
3) Install a gauge on each side of the suction or inlet screen to measure the pressure drop across the screen. A high-pressure drop indicates a clogged screen. (A clogged screen can cause the pump to fail.)

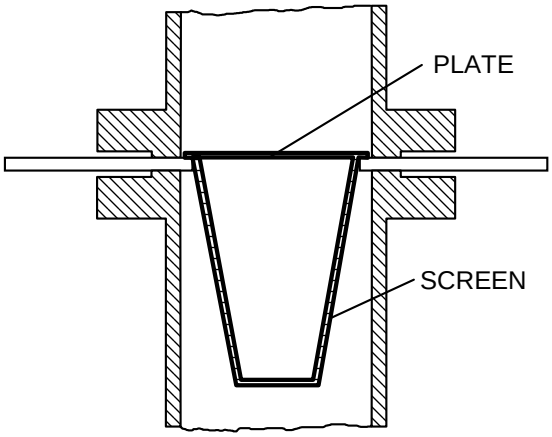

Figure 4- 8 : Suction Piping Temporary Screen

4.6.1.2 Welding to nozzles

When suction and discharge piping is welded to nozzles on the pump casing special precautions are necessary to prevent foreign object damage to parts within the casing. Temporary screens cannot be installed in the suction or inlet piping of all welded joints. Hence, as an alternative, Flowserve recommends:

1) The removal of the internal assembly from the casing;
2) Welding of piping to nozzles on the casing according to your practice;
3) The circulation of commercial cleaning solution through the casing and piping for several hours after completion of welding and before reinstallation of the internal assembly, thus preventing welding beads, pipe scale, and other foreign material from collecting in the casing;
4) Draining and thoroughly cleaning the casing by flushing with water;
5) The reinstallations of the internal assembly, only when the casing is thoroughly clean.

4.6.1.3 Auxiliary piping

When Flowserve supplies auxiliary piping, it is normally fitted to the pump before shipment, complete with all necessary pressure gauges, flow indicators, valves, and fittings. Common connections for hook-up with the plant's piping are shown by the Outline drawing in section 8. When others supply and install auxiliary piping, Flowserve identifies sizes and locations of all auxiliary pipe openings in the casing on the Outline drawing in section 8.

4.6.2 Installing nozzle extensions

When the nozzles are on the bottom of the casing, it may be necessary to weld an extension onto the discharge nozzle and/or the suction nozzle to connect the plant piping. Since this requires removal of the pump from the cradle and it is unlikely that pump can be reinstalled in the exact same spot on the cradle, welding should precede the first cold alignment. Generally, the major steps for installation of the nozzle extensions are as follows:

1) Verify that soleplates are grouted in and grout has cured.
2) If pump and cradle have been separated from soleplates, proceed as follows:
   a) Lift pump and cradle as outlined in section 2.3.
   b) Set pump and cradle on soleplates and install all cradle-to-soleplate hold down bolts with washer under each head. Tighten only enough to keep cradle from shifting.
3) Remove pump-to-cradle mounting bolts.
4) Lift pump from cradle as outlined in section 2.3, by:
   a) Step 2 under Soleplate-Mounted Barrel Pump (section 2.3.2) or
   b) Instructions for Soleplate-Mounted Single-stage Pump, whichever is applicable to your situation.
5) Hold pump directly above cradle at height necessary for welding extension nozzles and complete welding task.

OFFICIAL COPY - 001.39621.000073 - FB001 - 01 - Approved(A) - - - 07-Aug-2013 09:18 AM

6) Lower pump onto cradle, reinstall pump-to-cradle mounting bolts and tighten them down.
7) Remove hoist, lifting apparatus, and clevises.
8) Reinstall anything removed or disconnected in accordance with instructions in section 2.3 to facilitate safe lifting.

4.6.3 Seal piping flushing and cleaning

Whenever work is performed on seal flush piping (other than disconnection at terminal points) or new piping is fabricated, it is essential to clean and flush the piping. Additionally, it is usually necessary to preserve carbon steel piping from rust.

4.6.3.1 Carbon steel piping

Following rework or fabrication of carbon steel piping, to protect the seal from rust, scale, welding shot, grit and other foreign material, Flowserve recommends:

1) Sandblasting inside and outside of piping to remove varnish and welding slag;
2) Thoroughly flushing and air blasting inside of piping to assure removal of sand and debris,
3) Cleaning in hot alkaline bath and rinse,
4) Pickling in ten percent sulfuric acid solution and rinse,
5) Immersing in phosphate bath (Parkerize 100 or equivalent) and rinse,
6) Final rinse in chromic acid solution and oven dry.

4.6.3.2 Stainless steel piping

Following rework or fabrication of stainless steel piping, to protect the seal from welding shot, grit, and other foreign material, Flowserve recommends:
1) Sandblasting inside and outside of piping to remove varnish and welding slag.
2) Thoroughly flushing and air blasting inside of piping to assure removal of sand and debris.

4.7 Electrical connections

DANGER Electrical connections must be made by a qualified Electrician in accordance with relevant local national and international regulations.

It is important to be aware of the EUROPEAN DIRECTIVE on potentially explosive areas where compliance with IEC60079-14 is an additional requirement for making electrical connections.

It is important to be aware of the EUROPEAN DIRECTIVE on electromagnetic compatibility when wiring up and installing equipment on site. Attention must be paid to ensure that the techniques used during wiring/installation do not increase electromagnetic emissions or decrease the electromagnetic immunity of the equipment, wiring or any connected devices. If in any doubt contact Flowserve for advice.

DANGER The motor must be wired up in accordance with the motor manufacturer's instructions (normally supplied within the terminal box) including any temperature, earth leakage, current and other protective devices as appropriate. The identification nameplate should be checked to ensure the power supply is appropriate.

A device to provide emergency stopping must be fitted.

If not supplied pre-wired to the pump unit, the controller/starter electrical details will also be supplied within the controller/starter.

For electrical details on pump sets with controllers see the separate wiring diagram.

CAUTION See section 5.4 before connecting the motor to the electrical supply.

4.8 Final shaft alignment check

All adjustments during alignment should be made to the driver; the pump should be fixed in position on the baseplate or soleplate(s) as shown by the Outline drawing in section 8. To emphasize the importance of the procedure, driver mount pads are machined low on a baseplate where both driver and pump mount, making it necessary to shim under the driver feet in order to raise the driver shaft even with the pump shaft. In a case where driver and pump may be mounted on separate baseplates or soleplate(s), the driver should still be aligned to the pump. The following coupling procedures have been planned to apply in either case and to assure that both shafts are correctly aligned for extended operation. Additionally, general information that is particularly relevant to alignment is included for guidance.

Note: Flowserve recommends either the use of a double-reverse dial indicator or laser alignment procedure for alignment of pump and driver. If laser alignment is to be used, follow the procedure

OFFICIAL COPY - 001.39621.000073 - FB001 - 01 - Approved(A) - - - 07-Aug-2013 09:18 AM

provided by the manufacturer of the laser alignment equipment.

4.8.1 Setting driver shaft end space

If your pump is driven by a motor; to prevent destruction of motor sleeve bearings, which are usually found in heavy-duty electric motors, locate your motor in relation to the pump so as to ensure the required running clearance (or end space) between the thrust collars on the motor shaft and the face of the motor bearings (see **Figure 4-9** Motor Shaft Running Space below). To establish the required end space proceed as follows:

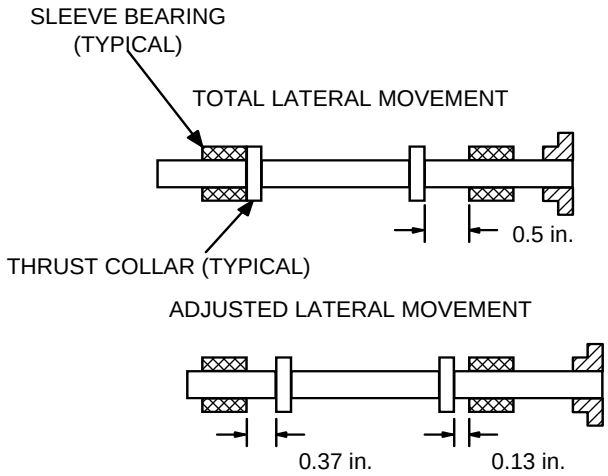

Figure 4- 9 : Motor Shaft Running Space

Note: If your pump is driven by an electric motor with ball bearings, or by any other driver, then skip to step 5 of this procedure.

1) See that instructions have been complied with under above headings:
   a) Alignment preconditions
   b) Installing coupling
2) Set motor on driver pads.
3) Measure total movement of motor shaft as follows:
   a) Push shaft into motor case until thrust collar butts against face of bearing as shown by **Figure 4-9** Motor Shaft Running Space; then select a reference point on motor case and mark shaft with pencil.
   b) Pull shaft out away from bearing face (i.e., toward pump) as far as it will go; then using the same reference point that was selected in step a above, mark shaft with pencil.
   c) Measure distance between pencil marks the distance (or total lateral movement) should be at least the minimum given in the vendor documentation in Section 10 or the Outline section 8.
4) Set end space by pushing shaft back in toward sleeve bearing 3 mm (0.13 in.) (See **Figure 4-9** Motor Shaft Running Space above). At this setting, there will be adequate end space between thrust collars and bearing faces. For example, if total lateral movement is 13 mm (0.50 in.) and the shaft is pushed back in toward bearing face 3 mm (0.13 in.) as described, the end space or clearance is 3 mm (0.13 in.) on the drive end and 10 mm (0.37 in.) on the opposite end.

Note: After setting end space the motor shaft should not be moved prior to scribing location of hold down bolts.

5) With motor shaft as positioned in step 4, or with driver shaft set as instructed in manufacturer's instructions, set driver so that distance between ends of driver and pump shafts is as specified in the Outline drawing in section 8. Also if you have gear-type coupling verify that dimension D equals dimension L as shown by **Figure 4-10** Measuring Distance between Ends of Pump and Driver Shafts below. Buttons as shown in figure are not installed on spacer where couplings are the diaphragm or disc type.

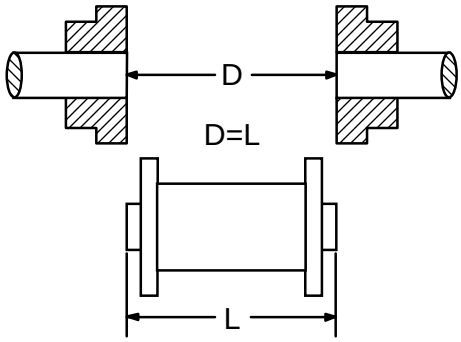

Figure 4- 10 : Measuring Distance between Ends of Pump and Driver Shafts

6) If hold down bolt holes has not been tapped in motor mount pads, you should now proceed with task (see section 4.8.2 below); otherwise, you may begin cold alignment (see section 4.8.3 below).

4.8.2 Tapping driver mount pads

Where driver mount pads have not been tapped for hold down bolts, they must be tapped before attempting to align driver to pump. Proceed as follows:

OFFICIAL COPY - 001.39621.000073 - FB001 - 01 - Approved(A) - - - 07-Aug-2013 09:18 AM

1) Make certain that driver end space has been established and that driver is positioned on clean mount pads with the space between driver and pump shafts as specified on the Outline drawing in section 8 (see **Figure 4-10** Measuring Distance Between Ends Of Pump And Driver Shafts above).
2) Verify that half-couplings are installed (see section 4.5.5).
3) Attach dial indicator bracket to driver half-coupling or shaft. Bracket must be rigid for accurate readings.
4) Set the bracket to the horizontal (9 o'clock) position and rotate both shafts 180 degrees to the 3 o'clock position. Total indicator reading (TIR) in horizontal plane (between 9 o'clock and 3 o'clock points) shall not exceed maximum allowable TIR (see section 10.3). If TIR is excessive:
   a) Hold distance between half-couplings and move driver frame to correct alignment in horizontal plane
   b) Again rotate shafts and check readings
   c) Repeat steps a and b until maximum allowable TIR in horizontal plane is not exceeded.
5) Reverse position of dial indicator and bracket and repeat step 4 above.
6) Remove dial indicator and bracket.
7) Scribe location of hold down bolts on mounting pads, then remove driver from pad.
8) Drill and tap hold down bolt holes.

Note: Since an accurate cold alignment is dependent upon both pump and driver being at ambient temperature, circulating oil (if applicable) must also be at ambient temperature.

4.8.3 Cold alignment

The term "cold alignment" refers to the alignment of pump and driver when they are at ambient temperature. Since thermal growth affects their alignment, cold alignment should be considered a preliminary yet essential task that must be performed diligently before the pump is operated for the first time. To bring the driver shaft in cold alignment with pump shaft, proceed as follows:

1) Verify that the requirements of the following paragraphs in this subsection have been satisfied:
   a) Alignment Preconditions
   b) Installing Coupling
   c) Setting Driver Shaft End space
   d) Tapping Driver Mount Pads
2) Attach lifting equipment to driver and set it on its mount pads.
3) Check hubs for run out or possible bent shaft conditions and correct, if necessary, before proceeding with alignment.

Note: When using a double-reverse dial indicator setup, each bracket must be checked for bar sag. Do not assume that similar brackets have identical sag.

4) Determine the distance from the bracket mounting point to the indicator reading point.
5) Securely attach the bracket to a length of rigid pipe, and install the indicator at the distance determined in step 4 above. (See **Figure 4-4** Determining Bar Sag)
6) Hold the pipe with the indicator facing up and set at "0". Without touching bracket, rotate the pipe 180 degrees so that the indicator is facing down. Read the indicator and record the reading. This is the amount of bar sag.
7) Rotate the pipe again so that indicator is facing up. It must return to "0".
8) Repeat steps 6 and 7 to confirm reading.

Note: All indicator readings must be taken on the opposite bracket or coupling hub or shaft. They must be recorded as viewed from the fixed unit (see **Figure 4-5** Alignment Orientation).

9) Attach one bracket to the driver coupling hub or shaft, and the other to the pump hub or shaft. Each indicator will read on the opposite bracket, coupling hub, or shaft. (See **Figure 4-6** Dial Indicator Setup for Alignment)
10) Set the bar sag amount(s) determined in steps 4 through 8 above into the indicator(s) as a plus amount (example: an indicated -0.003 would be set in as a +0.003) while in the upright (12 o'clock) position.

Note: Use of a shaft alignment graph, such as Flowserve Shaft Alignment Calculator (see **Figure 4-11** Shaft Alignment Calculator) aids and simplifies the alignment process. Further information may be obtained through the Flowserve service department.

OFFICIAL COPY - 001.39621.000073 - FB001 - 01 - Approved(A) - - - 07-Aug-2013 09:18 AM

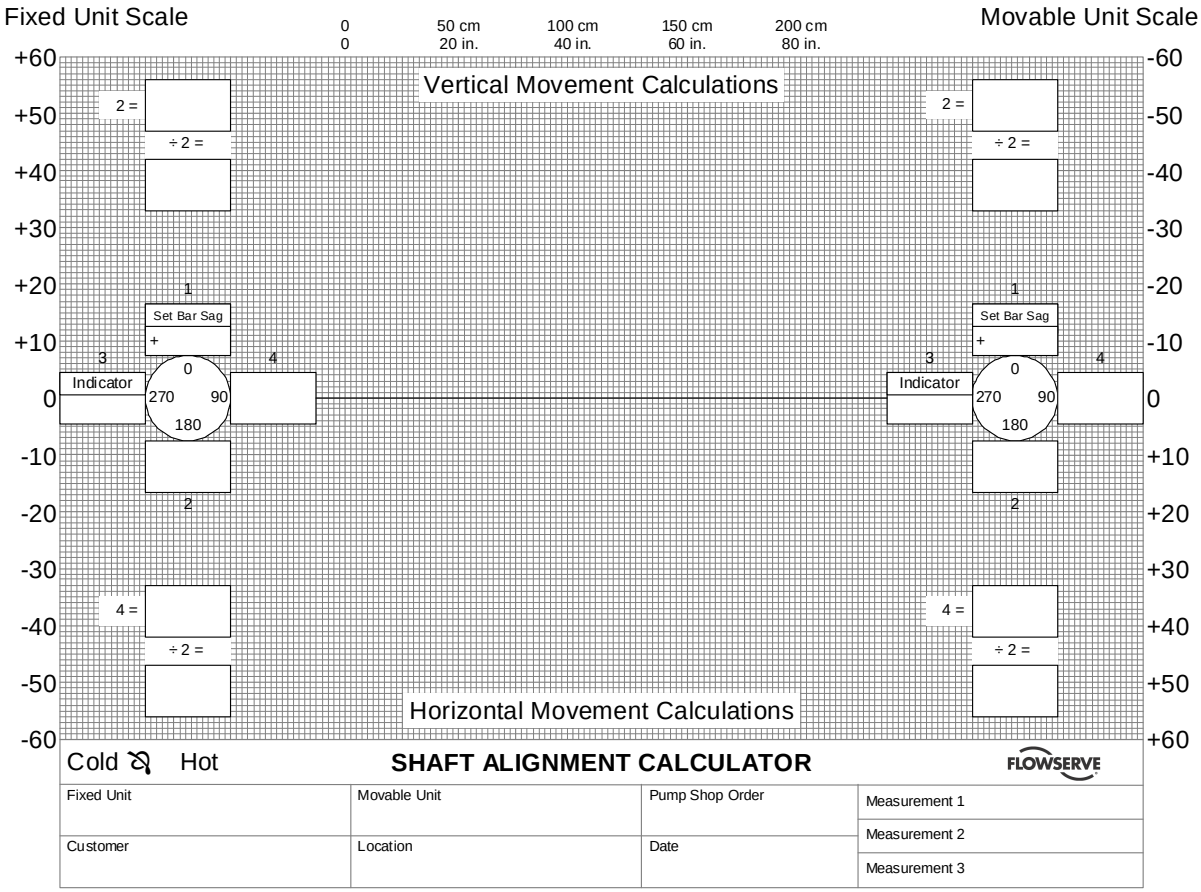

Figure 4- 11 : Shaft Alignment Calculator

11) Rotate both shafts 180 degrees (to the 6 o'clock position) and record indicator reading(s).

12) Repeat steps 10 and 11 to verify accuracy.

13) Set the bracket(s) to the horizontal (9 o'clock) position. Set indicator(s) at "0". Bar sag is not applicable in the horizontal plane.
14) Rotate both shafts 180 degrees (to the 3 o'clock position) and record indicator reading(s).
15) Repeat steps 13 and 14 to verify accuracy.
16) Measure the distance between dial reading points, and between dial reading point on fixed unit hub or shaft and each hold down bolt on movable unit (see **Figure 4-12** Alignment Measurement Points). Record these readings on the graph or by other suitable means.

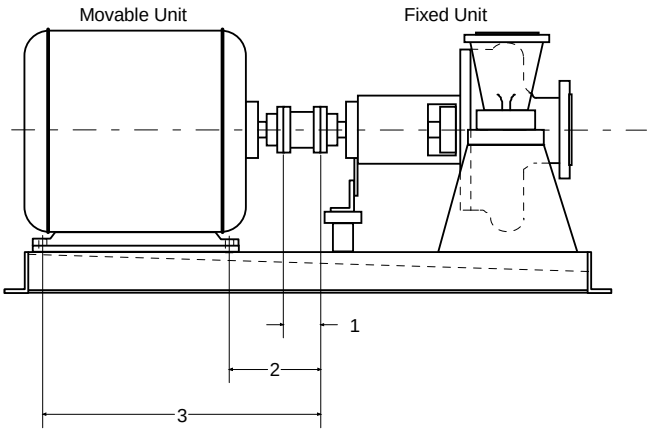

Figure 4- 12 : Alignment Measurement Points

17) Follow the directions on the graph sheet or use other suitable means to plot indicator readings.

Note: TIR in either the vertical or horizontal plane shall not exceed maximum allowable (see section 10.3). Readings on opposite sides must be opposite signs. Total angularity must not exceed 0.03 mm per 305 mm (0.001 in. per 12 inches).

OFFICIAL COPY - 001.39621.000073 - FB001 - 01 - Approved(A) - - - 07-Aug-2013 09:18 AM

18) Check hold down bolt positions on the graph or otherwise determine the amount of shims to be added for the vertical correction, and the movement required for the horizontal correction, if either exceeds maximums. If maximums are exceeded:
    a) Release driver hold down bolts, if installed
    b) Using lifting equipment, lift driver and shim under feet for height correction

Note: Jacking bolts, if installed should control horizontal movements.

    c) Place dial indicators at the base adjacent to the inboard and outboard hold down bolt area so that the exact amount of horizontal movement can be controlled;
    d) Make necessary horizontal corrections while monitoring with indicators;
    e) Repeat steps 11 through 19 above to verify alignment setting.

19) Torque hold down bolts using procedure specified in section 10.3, then repeat step 10 through 18.
20) Remove dial indicators and brackets and detach lifting equipment.
21) Check both pump and driver for soft foot at each hold down bolt as follows:
    a) Tighten all hold down bolts to the torque recommended by the equipment manufacturer.
    b) Install a dial indicator to read the vertical motion of an equipment foot. Loosen the hold down bolt for that foot until it is finger tight. Record the vertical motion of the equipment foot. The vertical motion should not exceed 0.05 mm (0.002 in.). Re-torque the hold down bolt to the recommended torque.
    c) Repeat step b above for all remaining equipment feet on the baseplate.
22) See section 4.6.1, and connect piping, as required.
23) Repeat steps 11 through 18 above and record readings. If TIR at either position of dial indicator exceeds 0.05 mm (0.002 in.), correct distortion caused by piping, and recheck alignment; pump, piping, and driver must be secured in correct alignment before proceeding with hot alignment.

Note: Steps 24 and 26 apply only if your coupling is the gear type.

24) Install flat strap across hub of driver half coupling by bolting to flange in two places.

Note: Unless hub is strapped down, it will vibrate when the motor is started in step 25.

25) Briefly operate driver in accordance with manufacturer's instructions and observe rotation of shaft; its rotation must correspond to the direction in which the pump is designed to turn.
26) Remove flat strap.
27) Secure coupling spacer between half-couplings, if not previously done.
28) Install coupling guard.
29) Using a machinist's scale, ensure that the aligning key underneath the discharge end of the casing is aligned within 0.79 mm (0.031 in.) of the exact center of the keyway in the pump casing [1100]. If not, then reposition the aligning key and recheck the alignment.

⚠ CAUTION. Gear-type couplings must be lubricated before running pump (see coupling manufacturer's instructions in the section 10).

4.8.4 Hot alignment

After completing a cold alignment of driver and pump, but before the pump is allowed to operate for an extended period, the pump must be operated for a short period until it reaches normal operating temperature (see section 5.7 and section 5.8), then shutdown (see section 5.9).

Check the alignment immediately after shutdown (ideally, within 10-15 minutes thereof) in order to determine whether the centerlines of the driver and pump shafts coincide when both units are hot. This coincidence is necessary to assure efficient extended operation of the pump. The dial indicators, brackets, and shims should be available at the pump before shutdown. Requirements for a hot alignment check are:

1) Remove coupling guard.
2) Remove coupling spacer, if applicable.
3) Complete step 9 through 17 under COLD ALIGNMENT (section 4.8.3) above.

Note: TIR in either the vertical or horizontal plane shall not exceed maximum allowable (see section 10.3). Readings on opposite sides must be opposite signs. Total angularity must not exceed 0.03 mm per 305 mm (0.001 in. per 12 inches).

OFFICIAL COPY - 001.39621.000073 - FB001 - 01 - Approved(A) - - - 07-Aug-2013 09:18 AM

4) Check hold down bolt positions on the graph or otherwise determine the amount of shims to be added or subtracted for the vertical correction, and the movement required for the horizontal correction, if either exceeds maximums. If maximums are exceeded in this hot alignment:
   a) Allow units to cool down
   b) Complete steps 18a through 18e, 19 and 20 under Cold Alignment (section 4.8.3).
   c) Repeat Hot Alignment (section 4.8.4) procedure until TIR is within specifications.
5) Dowel driver feet that are nearest coupling, and pump feet that are nearest coupling if pump is equipped with aligning pin and key.

4.9 Protection systems

Ex The following protection systems are recommended particularly if the pump is installed in a potentially explosive area or is handling a hazardous liquid. If in doubt consult Flowserve.

If there is any possibility of the system allowing the pump to run against a closed valve or below minimum continuous safe flow, a protection device should be installed to ensure the temperature of the liquid does not rise to an unsafe level.

If there are any circumstances in which the system can allow the pump to run dry, or start up empty, a power monitor should be fitted to stop the pump or prevent it from being started. This is particularly relevant if the pump is handling a flammable liquid.

5 COMMISSIONING STARTUP, OPERATION AND SHUTDOWN

5.1 Precommissioning procedure

Before being put on line (i.e., started), the pump, the driver, and any auxiliary systems require an external inspection for operational readiness. Both the lube oil and seal flushing systems require flushing. A new pump or an old pump that has been preserved by the plant requires depreservation before liquid is introduced for the first time. And a pump that pumps a liquid at a temperature above 121℃ (250℉) must undergo a warm-up prior to operation to prevent thermal distortion and the consequent rubbing or breaking of parts. The following paragraphs are given in the sequence recommended for start-up.

5.1.1 Readying and servicing driver

Before operating the driver, gear, or any other auxiliary equipment, perform the operational readiness and servicing checks that are recommended in their manufacturer's operating and maintenance instructions (see Section 10 or your plant's data file for information).

5.1.2 Readying and servicing pump and auxiliary systems

Before starting the pump or an auxiliary system, perform the readying and servicing tasks in the given sequence for the pump and any auxiliary systems installed.

5.1.2.1 Initial steps in preparing brand-new or factory-overhauled pump and auxiliary systems for operation

Proceed as follows:
1) Comply with requirements under section 2.4.3
2) Flush lube oil system piping and seal flushing piping as required in section 5.2.4.
3) Make certain that lube oil system piping and seal flushing piping are connected, secured, and ready for operation.
4) Check all auxiliary components such as indicators, filters, heat exchangers, control panels, terminal boxes and housings, motors, auxiliary pumps, and valves for damage, installation, cleanliness, and security.
5) Ensure:
   - That seal units are installed, and
   - That bearings are assembled.

5.1.2.2 Initial steps in preparing for operation of old pump that has been off-line for extended period

Make certain:
1) That the pump is depreserved in accordance with procedures which that assure removal of any preservative compound which is incompatible with, or will impede, pumpage (or flow).
2) That any rust and corrosion will not affect function of internal assembly, bearings, and seals.
3) That seal flushing piping is free of rust, corrosion, and preservative compound.
4) That lube oil piping and reservoir are free of sludge, foreign materials such as metal particles and welding beads, moisture, and other contaminant.
5) That lube oil reservoir is thoroughly cleaned with solvent such as kerosene or naphtha and wiped dry with clean lint free rags.

5.1.2.3 Following fabrication and rework of piping

Flush applicable system as required in section 4.6.3 and section 5.2.4 whenever piping is reworked, a

OFFICIAL COPY - 001.39621.000073 - FB001 - 01 - Approved(A) - - - 07-Aug-2013 09:18 AM

new section fabricated, or lube oil reservoir is repaired.

5.1.2.4 Servicing empty lube oil system

The principal steps in servicing your pump are outlined below:

1) See that lube oil reservoir, lube oil cooler, filter, and other points in lube oil system where water or condensation could accumulate are dry.
2) Close reservoir, heat exchanger, and filter drain valves, and any other drain valves in piping (see lube oil system schematic drawing).
3) Fill reservoir with lube oil that is specified in section 10.3 until lube oil level in level glass rises to maximum mark on glass. If there is no mark, lube oil level should rise higher than 1/2 but no more than 2/3 of the length of the glass. Reinstall reservoir cover.
4) If lube oil console is equipped with temperature controllers, verify that its air regulators are adjusted to the pressure specified by the lube oil console manufacturer and the temperature controller setting is as specified in lube oil schematic drawing.
5) See lube oil schematic drawing in the back of this manual, and line up hand-operated isolation valves so that flow from the auxiliary or spare lube oil pump is through the system. Start auxiliary lube oil pump and verify that pressure gauge on the lube oil console panel reads the pressure specified on the lube oil schematic drawing in the back of this manual; or in the vendor's instructions in the section 10; or in your plant data file; as applicable.

Note: To identify an individual valve that is normally closed during lube oil system operation, see the lube oil schematic in the back of this manual. Any valve that is not shown in the schematic as normally closed is normally open.

6) Position hand-operated lube oil system valves as follows:
   a) Open all isolation valves in discharge piping, return piping, and instrument lines and all vent valves in the filter and heat exchanger
   b) Close all valves in the bypass piping for the back pressure control valve, heat exchanger, temperature control valve, and filter
   c) Close all lube oil instrument panel test valves, and all drain valves on the low level switch, reservoir, heat exchanger, and filter
7) Start auxiliary or spare lube oil pump and operate it until the system is filled with lube oil and all air is expelled from the system.
8) Close vent valves in the filter and heat exchanger.
9) Shut down auxiliary or spare lube oil pump and check level of lube oil reservoir.

5.1.2.5 Checking and replenishing lube oil reservoir

Observe lube oil reservoir level glass: level of lube oil should appear between minimum and maximum level marks on the glass. If there are no marks, then lube oil level should appear higher than 1/2 but less than 2/3 of the length of the glass. To replenish reservoir, fill reservoir with lube oil that is specified in section 10.3 until lube oil level in level glass rises to maximum mark on glass. If there is no mark, lube oil level should rise higher than 1/2 but no more than 2/3 of the length of the glass. Reinstall reservoir cover.

If lube oil system is equipped with an accumulator (see lube oil schematic in the back of this manual), make certain that lube oil pressure is zero, then check its pre-charge: gauge should read the pressure specified in Section 10 or lube oil schematic drawing. To service the accumulator, see manufacturer's instructions in section 10.

5.1.2.6 Inspecting components

If step 4. of section 5.1.2.1 has not been complied with, immediately before warm-up, check all auxiliary components such as indicators, filters, heat exchangers, control panels, terminal boxes and housings, motors, auxiliary pumps, and valves for damage, installation, cleanliness, and security.

5.1.2.7 Inspecting pump, driver, and piping

Immediately before warm-up, inspect pump, driver, and their associated equipment and piping for cleanliness, evidence of leakage, damage, installation, and security.

5.1.2.8 Warming up pump

When temperature of the pumped fluid is above 121℃ (250℉), warm up pump before starting as follows:

1) Ensure:
   a) Hand-operated valves are positioned as required in step 6 of section 5.1.2.4
   b) Lube oil reservoir is at level required in section 5.1.2.5.
   c) Inspections required above did not reveal any discrepancies which could not be corrected

OFFICIAL COPY - 001.39621.000073 - FB001 - 01 - Approved(A) - - - 07-Aug-2013 09:18 AM

2) Start auxiliary or spare lube oil pump. Verify that lube oil pressure indicator that is located downstream of backpressure control valve reads the same as in step 5 of section 5.1.2.4 above. For further information on backpressure control valve see manufacturer's data in section 10.
3) Start circulation of cooling water to applicable units: heat exchangers, seal housings, and driver. Verify flow. (To determine cooling systems that are applicable to your pump, see outline and piping drawings and your plant's data files.)
4) Prime the pump as follows:
   a) Open suction valve, allowing pump to begin filling
   b) Open valves in vent line to relieve vapors keeping line open until all vapors escape from both pump and suction line
   c) Close all drain valves, except any functioning as part of the warm-up circuit

CAUTION To prevent exposing low pressure ends of the casing to a pressure greater than specified maximum suction pressure and resulting pump damage, make certain that the suction valve is always open before starting circulation in the warm-up circuit, and that it remains open throughout the warm-up procedure.

When venting or draining pumps which contain toxic, flammable, and/or high temperature fluids, ensure that the vented or drained fluid is piped to a safe collector that will prevent release of the fluid into the surrounding area. Failure to do so can result in equipment damage, personnel injury, or death.

Note: A vent connection (or line) may not be provided for pumps with top-mounted suction and discharge nozzles, since vapors can escape through the nozzles.

CAUTION Never permit reverse warm-up flow to cause rotation of the rotor. Rotation opposite of the normal direction of rotation results in loosened nuts on the shaft and possible pump damage. But if warm-up flow is in the same direction as normal flow, slow rotation of the shaft is not damaging, providing that lube oil flow is maintained to the bearings and turning gear speed is not exceeded.

Note: The recommended warm-up rate is 28 to 42℃ (50 to 75℉) per hour.

5) Start circulation in warm-up circuit and monitor flow, temperature, and pressure (see your plant's data file and Outline drawing in section 8).
6) Verify that all valves in minimum flow and pressure reducing sleeve leak-off lines, when installed (see your plant's data file or Outline drawing in section 8), are fully open.

Note: For pumps without case thermocouples, surface pyrometers are recommended for determining the case temperature specified in step 7. Once a time is established for warm-up, pyrometers need not be used for subsequent warm-ups, providing that warm-up conditions remain relatively the same.

7) Continue to warm the pump until differential temperature between the top and bottom of case decreases to 42℃ (75℉), as indicated by thermocouples, and the lower of the two temperatures is within 42℃ (75℉) of the stream temperature to which the pump will be exposed when operating. At this point the temperature of the pump satisfies the condition for hot standby or for being placed in operation. As an alternative to this procedure, warm the pump for the minimum time period determined by using pyrometers.
8) With hand-operated valves still positioned as set up above and spare or auxiliary lube oil pump operating, place pump in operation according to instructions that are given in.

5.2 Pump lubricants

5.2.1 Lubricating oil

Operation of the unit without proper lubrication can result in overheating of the bearings, bearing failures, pump seizures and actual breakup of the equipment, exposing operating personnel to injury.

Remember that oil requires frequent replenishment at normal operating temperatures and very frequent replenishment at elevated operating temperatures. Oil is always subject to gradual deterioration from use and contamination from dirt and moisture. This deterioration and contamination will, in time, be harmful to the bearing and cause premature wear. For this reason, oil should be checked for contamination and deterioration regularly.

OFFICIAL COPY - 001.39621.000073 - FB001 - 01 - Approved(A) - - - 07-Aug-2013 09:18 AM

5.2.2 Lube oil change recommendations

Flowserve recommends that the lube oil in the pump be inspected periodically, at least weekly, and changed whenever:

a) The lube oil color darkens, indicating contamination from dirt and foreign substances
b) The lube oil appears milky or emulsified
c) Foreign particles appear in the lube oil

As a minimum, lube oil should be changed at least every six months.

5.2.3 Oil specifications

Straight mineral oils without additives are generally preferred for rolling element bearing lubrication. It should preferably be of the turbine type and not contain free acid, chlorine, sulfur or more than a trace of free alkali. Quality mineral oils with a minimum Viscosity Index (VI) of 95 is recommended.

An ISO Viscosity Grade (VG) Number identifies lubricating oils. The VG Number is the viscosity of the oil at 38℃ (100℉) in centistokes. In the majo rity of instances, a turbine oil with a VG Number of 32 (nominally equivalent to SAE 10) will meet rolling element bearing lubrication requirements (see oil temperature).

Oil Characteristics	
Saybolt Viscosity (SSU) 38℃ (100℉)	158 Seconds
Pour Point	-7℃ (20℉)
Flash Point	204℃ (400℉)
Recommended ISO Viscosity Grade (VG) Number	32

Oil Characteristics

In a majority of instances, ISO 32 (nominally equivalent to SAE 10 turbine type oil) will meet the above specification. Refer to lube, seal, and lube oil console piping drawings and notes for information pertaining to your system.

CAUTION Lubricant must be compatible with all parts requiring lubrication. Oil temperature

Oil temperature entering the plain/thrust end bearings should be maintained between 16℃ (60℉) and 71℃ (160℉).

Alarm temperature is 80℃ (176℉) with shutdown temperature set at 85℃ (185℉). If bearing oil temperature exceeds the above mentioned limits, cooling liquid to the lube oil cooler will have to be increased.

ISO 32 may be considered for continuous operating oil temperatures between 16℃ (60℉) and 49℃ (120℉), with a minimum start up temperature of 4℃ (40℉). For start-up when oil temperature is below 4℃ (40℉), oil preheating is recommended.

5.2.4 Flushing and cleaning lube oil system

During work on the piping of a pump, dirt, grit, and chips are apt to accumulate inside the piping. This can happen to new, factory-installed piping that has been thoroughly cleaned as well as piping on a pump that has been in service for some time. Therefore, to prevent bearing damage from such matter, it is foresighted to clean and flush the lube oil system following field work on the piping of any pump, where the work performed involved storage, installation, or fabrication.

Flowserve recommends the use of either flushing procedure that is given below; however, if your pump is equipped with auxiliary lube oil pump, its use is preferred.

Note: Regardless of which procedure is used to flush the lube oil system, it will be necessary to employ a lube oil filter in the piping, downstream of the lube oil pump. Additionally it will be necessary to have a differential pressure indicator across the filter.

5.2.4.1 Flushing lube oil system using auxiliary lube oil pump

The following flushing procedure applies to a pump that is equipped with an auxiliary lube oil pump. For illustrations of piping and parts which are referred to in the procedure, see lube oil piping and assembly drawings in the back of this manual.

1) Remove inboard sleeve bearing, outboard sleeve bearing, and thrust bearings (see section 6.7.4). Reinstall upper halves of housings, using only half of parting flange bolts.
2) Remove reservoir cover, thoroughly clean interior with petroleum base solvent such as kerosene or naphtha, and wipe dry with clean, lint free rags
3) Fill reservoir with recommended type lube oil (see section 10.3) heated, if practicable, to 82℃ (180℉).
4) Perform first phase of flushing cycle as follows:
   a) Start auxiliary lube oil pump and circulate lube oil for 20 hours.
   b) During 20-hour cycle, continuously tap entire length of piping to loosen scale and slag.

OFFICIAL COPY - 001.39621.000073 - FB001 - 01 - Approved(A) - - - 07-Aug-2013 09:18 AM

c) During 20-hour cycle, periodically check differential pressure indicator at filter for an increase in differential pressure that could indicate filter is becoming clogged. Consider indication in relation with such factors as capacity of filter, temperature of flush, pressure of flush and general condition of piping. Should consideration point to a clogged filter shut down auxiliary lube oil pump; then clean and reinstall filter. Restart auxiliary lube oil pump and continue flush.

Note: To prevent an accumulation of moisture from condensation when heated lube oil is used, allow lube oil to cool gradually during last hour or two of the cycle.

d) Shut down auxiliary lube oil pump at end of 20-hour cycle

5) Perform final phase of flushing cycle as follows:
   a) Clean and reinstall filter
   b) Start auxiliary lube oil pump and circulate lube oil for another 4 hours, all the while tapping the entire length of piping
   c) Shutdown auxiliary lube oil pump and recheck filter. If filter is even partially clogged from any matter, clean and reinstall filter and repeat second bullet point above
   d) Repeat steps b and c above until filter is clear of sludge, scale and the like, then proceed to step 6
6) Drain lube oil piping reservoir and again clean reservoir according to step 2 above. To prevent entry of any dirt or foreign matter in reservoir, install cover when cleaning is complete.
7) Using petroleum base solvent such as kerosene or naphtha and clean cloth, swab inside of lowest piping and piping with low spots.
8) Connect piping at all points.
9) Remove upper halves of bearing housing and install inboard sleeve bearing, outboard sleeve bearing, and thrust bearings according to instructions under section 6.9.5.
10) Fill lube oil system to required level as instructed in section 5.1.2.4 and/or section 5.1.2.5. Run auxiliary lube oil pump until lines are full and recheck reservoir.

5.2.4.2 Flushing lube oil system without using auxiliary lube oil pump

The following flushing procedure applies where an auxiliary lube oil pump is not available for use in flushing the lube oil system. For illustrations of piping and parts that are referred to in the procedure, see lube oil piping and assembly drawings in the back of this manual.

1) See that piping is disconnected from reservoir, bearing housings, cooler, and filter; then tap piping until all slag and scale loosens.
2) Using a clean swab soaked in a petroleum base solvent such as kerosene or naphtha, swab inside of each piping section; then follow up with a clean dry swab. Verify that piping is free of foreign material.
3) Connect piping at all points.
4) Operate pump (see section 5.7 and 5.8) for approximately 2 hours and during this time, periodically check differential pressure for an indication of severe increase in differential pressure. Should such increase occur, immediately shut down pump (see section 5.9) and check filter. If necessary, clean filter and reinstall it; then complete run.
5) Remove, inspect, and clean inboard sleeve, outboard sleeve, and thrust bearings (see section 6.7.5, setion 6.8.1, section 6.8.2.1 and section 6.8.2.3).
6) Drain, then clean lower halves of bearing housings with a petroleum base solvent; do not remove bearing housings.
7) Drain, then clean (or flush) with a petroleum base solvent all of the following equipment that is applicable to the lube oil system of your pump:
   a) Lube oil cooler,
   b) Reservoir,
   c) Filter, and
   d) Filter housing.
8) Install inboard sleeve, outboard sleeve, and thrust bearings according to instructions under section 6.9.5.
9) Operate pump (see section 5.7 and section 5.8) for approximately 2 hours, and then shut it down (see section 5.9). Check lube oil filter for sludge and foreign matter such as scale and slag. If filter is even partially clogged from any matter, clean and reinstall filter; then repeat above steps 1 through 8: filter shall be clear of sludge, scale, and the like before the pump is put on line for extended operation.

5.3 Impeller clearance

Please refer to specification sheet section 10.3 for those values.

5.4 Direction of rotation

For the direction of rotation refer to the General Arrangement drawing

5.5 Guarding

⚠ ***Guarding is supplied and fitted to the pump set. If this has been removed or disturbed ensure***

OFFICIAL COPY - 001.39621.000073 - FB001 - 01 - Approved(A) - - - 07-Aug-2013 09:18 AM

that all the protective guards around the pump coupling and exposed parts of the shaft are securely fixed.

5.6 Priming and auxiliary supplies

CAUTION Ensure all electrical, hydraulic, pneumatic, sealant and lubrication systems (as applicable) are connected and operational.

CAUTION Ensure the Inlet pipe and pump casing are completely full of liquid before starting continuous duty operation.

5.7 Starting the pump

When in the vicinity of caustic, corrosive, volatile, flammable, hot, cold, or otherwise hazardous liquids, wear protective clothing that is compliant with your organization's local safety procedures. When in the vicinity of toxic liquids or vapors, wear breathing protection that is compliant with your organization's local safety procedures. Do not allow sparking, flames, or hot surfaces in the vicinity of equipment that handles volatile or flammable liquids.

Note: All pressure, temperature, and flow requirements listed in this section are defined in one of the following, unless otherwise specified in section 10.3 of this manual, Flowserve Engineering drawings in back of this manual, or in your plant data file.

Place the pump in operation using the following task sequence:

1) Ensure:
   a) That driver and gear (if applicable) have been serviced and are ready for start-up as required under section 5.1.1 above
   b) That requirements for pumps and auxiliary systems under section 5.1.2 have been met
   c) That auxiliary or spare lube oil pump is operating
   d) That the pump discharge valve is in bypass, if your pump is so equipped

CAUTION In order to ensure adequate lubrication of interior parts of the pump, sufficient pressure differential must be generated so there will be a nominal flow of pumpage across running clearances; therefore it is essential that the pump be operated above minimum governor speed of a turbine driver.

2) Start driver (see manufacturer's instructions in Section 10 for starting driver).

Note: A sudden drop in discharge pressure usually means a failure in the system supplying liquid to the pump and vaporization of liquid inside the pump. Once the pump is shut down and rotation stops, it may be restarted after the vapor is cleared by opening the vent line. If normal discharge pressure is established immediately on restart, the pump is clear of vapor, and normal operation may be continued. If discharge pressure is not established immediately, again shut down the unit and determine the cause.

3) Slowly begin to open discharge valve as soon as pump reaches full speed and pressure (within a few seconds). (A slow opening avoids abrupt surging in suction and discharge lines.) Immediately shut down pump if:
   a) Pump begins to run rough or vibrate
   b) Temperature of lube oil entering thrust bearing exceeds maximum allowed
   c) Discharge pressure drops suddenly
   d) Circulation of cooling water for heat exchangers or seal housing stops
   e) Lube oil pressure drops to zero
   f) Circulation of seal flushing liquid stops
   g) Clutch malfunctions

4) Check pressure gauge that is located in lube oil system instrument panel (see lube oil schematic drawing). Gauge should read pressure of lube oil as given on lube oil schematic drawing and auxiliary or spare lube oil pump should shut down. If spare lube oil pump does not shut down, then shut it down. Then if lube oil pressure drops off, immediately shut down pump and troubleshoot lube oil system (see section 7).
5) Close off vent valves and valves in warm-up circuit.
6) See that injection of flushing liquid to seals is adequate to avoid damage to pump and seals.
7) Check for leakage around shaft, at seal housings, and at bearing housings. Mechanical seals and bearing housings should not show leakage.
8) See that cooling water to heat exchangers and seal housings is adequate.

Note: Changes in ambient or cooling water temperature may require cooling water flow to the lube oil cooler to be increased to maintain lube oil

OFFICIAL COPY - 001.39621.000073 - FB001 - 01 - Approved(A) - - - 07-Aug-2013 09:18 AM

temperatures in accordance with the lube oil schematic drawing.

9) Check readings of the following instruments:
   a) Pressure gauge in lube oil console should read pressure specified in lube oil schematic drawing in the back of this manual
   b) Lube oil cooler inlet and outlet temperatures and lube oil inlet and outlet temperatures for bearings and clutch (if applicable) should read temperatures specified in lube oil schematic drawing

5.8 Operation

5.8.1 Checks and minor adjustments

With the pump put on line in accordance with the procedures under section 5.7 above, it should run quietly and smoothly with little attention once the temperature of the bearings and the temperature in the seal flush system stabilize; usually after 60 minutes of pump operation. During these first 60 minutes and periodically afterwards, monitor indicators and alarm circuits, make any necessary minor adjustments, and perform essential servicing; the fundamental tasks are outlined below.

Note: For readings in alarm circuits, see your plant's procedures.

1) Monitor alarm circuits, lube oil system, cooling water systems, and seal flush system, according to your plant's setup and procedures for pump. If alarm is activated, shut down pump (see section 5.9), and correct cause (see section 7 and lube oil console manufacturer's data in section 10).
2) Monitor discharge pressure of pump. If pressure of pump drops suddenly shut down pump (see section 5.9) and correct cause (see section 7).
3) After first 10 to 15 minutes of pump operation, check for leakage around shaft sleeves; for pumps equipped with mechanical seals, leakage shall not be evident;
4) Check that readings of indicators of temperature, pressure, and flow for these components and systems are as given in the engineering drawings in the back of this manual and your plant's procedures:
   a) Cooling water system for heat exchangers
   b) Cooling water system for seal housings, and
   c) Seal flush system
5) Check that temperature of lube oil at these indicators is as given in lube oil schematic drawing:
   a) Inlet temperature indicator of heat exchanger
   b) Outlet temperature indicators of pump bearings
6) Check that lube oil outlet temperature indicator of driver bearings and speed increaser gear (when installed) are as required by the manufacturer (see driver and speed increaser gear manufacturer's data in section 10.)
7) Check lube oil inlet temperature indicator of pump bearings and driver and outlet temperature indicator of heat exchanger; readings should be approximately same.

Note: Because heat that is generated by a bearing is constant, a change in ambient temperature may require additional cooling of the bearings. That is, when the ambient or cooling water temperature is hotter than usual, it may be necessary to increase the flow of cooling water through the lube oil heat exchanger in order to decrease the temperature of the lube oil, and also to adjust the pressure reducing valve to maintain the prescribed system pressure; but adjustment, in each case, shall be such that the lube oil temperature, flow, and pressure at the bearings of the pump is as specified in the lube oil schematic drawing.

8) Check lube oil discharge pressure indicators that are located in piping immediately downstream of pressure reducing valve and in instrument panel; indicators should read inlet pressure of lube oil at pump bearings and driving units as given lube oil schematic drawing.
9) Check lube oil discharge pressure indicators that is located immediately downstream of main lube oil pump; indicator should read setting given in lube oil console manufacturer's data (see Section 10) for back pressure control valve. If reading is off, adjust valve so that indicator reads given setting. The other indicator should read zero. For information on valve, see valve manufacturer's instructions in section 10.
10) In step 8, if discharge pressure indicator did not read inlet pressure of lube oil at bearings of pump and driving units as given in lube oil schematic drawing, adjust pressure reducing valve so that indicators read specified inlet pressure. For information on valve, see valve manufacturer's instructions in section 10.

Note: If the pressure of the main lube oil pump decreases below the required pressure (see lube oil schematic drawing) the low lube oil pressure switch should activate an alarm, and if pressure continues to decrease the auxiliary or spare lube oil pump pressure switch should activate to energize the spare or auxiliary lube oil pump and the main lube oil

OFFICIAL COPY - 001.39621.000073 - FB001 - 01 - Approved(A) - - - 07-Aug-2013 09:18 AM

pump should shut down. An additional pressure switch is incorporated to de-energize power to driver should both lube oil pumps lose pressure (see lube oil console manufacturer's data in Section 10).

11) Verify:
    a) That flow rate of pump is as required
    b) That lube oil system, cooling system, and seal flush system do not evidence leakage
12) Observe differential pressure indicator of differential pressure and switch unit or differential pressure indicator, whichever is applicable (see lube oil console manufacturer's data in Section 10). If the differential pressure of lube oil exceeds is that specified by lube oil console manufacturer, manually route lube oil through clean filter in accordance with its manufacturer's instructions in section 10. Otherwise lube oil passage through filter is nominal.
13) Observe lube oil reservoir level glass; level of lube oil should appear between minimum and maximum marks on glass; if there are no marks; lube oil level should appear higher than 1/2 length of glass but not higher than 2/3 its length. To replenish reservoir, see section 5.1.2.5.
14) Observe running of pump. If running becomes rough (i.e., vibration increases) or noisy or pump suction and discharge gauges give erratic readings, shut down pump and determine cause (see section 7).
15) Observe running of driver or driving units, (i.e., speed increaser gear, motor, turbine, diesel) and couplings and verify that it is nominal (see their manufacturer's instructions in section 10).
16) If your unit is equipped with a metered orifice in the balancing leak-off line, then observe the differential pressure in that line periodically. This differential pressure is an accurate indication of the leakage across the pressure reducing bushing, which will give an overall indication of the level of wear of the wearing rings and bushings inside of the pump. When this differential pressure has increased by a factor of 4 over its initial value at pump installation or overhaul, then consideration should be given to pump overhaul and renewal and/or replacement of the pump wear components.

5.8.2 Operating at reduced capacity

The centrifugal pump may be operated below rated capacity providing that flow remains above minimum. But you should remember that throttling the discharge reduces both capacity and efficiency of the pump. Because of the drop in efficiency, a greater portion of the horsepower input goes into heating the liquid in the pump. Unless the flow through the pump is sufficient to carry away this excess heat, the liquid will boil and the pump will become vapor bound and seize immediately.

CAUTION Reducing capacity by throttling the suction valve is ineffective and hazardous and should not be attempted because it may reduce the pressure in the eye of the impeller below the required minimum, causing destructive cavitation or seizure.

Operation may be initiated by:
1) Throttling the discharge
2) Reducing the speed
3) Throttling the discharge and reducing the speed.

Note: To take pump off line and put it in hot standby, see section 5.9.

5.9 Stopping and shutdown

There are usually two circumstances for stopping the pump: cold shutdown and hot standby. Normally, only those pumps that require warm-up are placed in hot standby. The recommended procedures for affecting these shutdowns are given below.

5.9.1 From on-line operation to cold shutdown

To prevent interior parts from becoming dry and seizing, the pump should be shut down rapidly as follows:

1) See that valves in minimum flow circuit (see your plant's data file) are open, then close discharge valve (or place discharge valve in bypass).

CAUTION The discharge valve should be closed by the time the pump stops rotating to prevent backward rotation of the pump should the check valve stick.

2) Cut power to driver; recommended procedure for turbine unit is to stop turbine by tripping emergency over speed trip.

Note: To shut down the lube system and cooling water system of the lube oil console, see the lube oil console manufacturer's instructions and drawings in the section 10.

3) When the pump has stopped rotating, shut down lube oil system.

OFFICIAL COPY - 001.39621.000073 - FB001 - 01 - Approved(A) - - - 07-Aug-2013 09:18 AM

4) Close off valves in all vent lines and cooling liquid lines (as furnished) to applicable units: heat exchangers, seal housings, and driver. To determine cooling systems that are applicable to your pump see section 8 and piping drawings in the back of this manual, and your plant's data files.)
5) Close off valves in seal flush system, as applicable. (To determine systems that are applicable to your pump, see section 8 and piping drawings in the back of this manual, and your plant's data file.)

Note: To open drain valves in the cooling water system of the lube oil console, see the lube oil console manufacturer's instructions and drawings in section 10.

⚠ ***When venting or draining pumps which contain toxic, flammable, and/or high temperature fluids, ensure that the vented or drained fluid is piped to a safe collector that will prevent release of the fluid into the surrounding area. Failure to do so can result in equipment damage, personnel injury, or death.***

6) If a prolonged shutdown and temperature below 0℃ (32℉) is anticipated, open all valves in drain lines and verify that cooling water systems, seal flush system, and case are drained. (To identify drains besides those on lube oil console, see section 8 and piping drawings in the back of this manual, and your plant's data file.)

⚠ CAUTION Cold water should not be circulated through the lube oil cooler or bearing jackets of an idle pump.

7) Leave valves in minimum flow and balance chamber leak-off lines open, when practical (see your plant's data file).
8) Leave suction valve open, when practical, thereby assuring that low-pressure end of case will not be damaged by an unintentional reverse flow.

5.9.2 From on-line operation to hot standby

A pump on hot standby should be put on line (see section 5.7) once every 2 weeks for 1 to 2 hours to check its operation. To assure that the pump operating with flow at a temperature of 121℃ (250℉) and above can be put back on the line without delaying for warm-up, proceed as follows:

1) See that valves in minimum flow circuit (see you plant's data file) are open, then close discharge valve (or place discharge valve in bypass).
2) Cut power to driver; recommended procedure for turbine unit is to stop turbine by tripping emergency overspeed trip.
3) See that suction valve remains open.
4) After rotation stops, reopen the discharge valve and verify if check valve is tightly closed by watching for reverse rotation.
5) Leave following valves in the positions given:
   a) Valves in cooling water circuit as furnished to applicable units: heat exchanger, seal housing, driver, etc.: OPEN. (To determine cooling systems that are applicable to your pump, see Outline and Piping drawings in the back of this manual, and your plant's data files.)
   b) Valve in pump vent line, when line is installed: OPEN
   c) Valves in drain lines, except any functioning as part of warm-up circuit CLOSED
6) Leave valves in minimum flow and balance chamber leak-off lines open.
7) Operate spare or auxiliary lube oil pump (see lube oil console manufacturer's instructions in Section 10).
8) Verify that valves in warm-up circuit are open.

Note: To permit pump to cool off and be taken out of service when in hot standby, close warm-up circuit and stop lube oil flow when the case temperature drops below 38℃ (100℉).

5.10 Hydraulic, mechanical and electrical duty

The following discussions are focused on the principles that underlie the operation of your pump. Where figures are not included with the text, see the pump assembly drawing and schematics in the back of this manual, which also provide pictorial support of the text.

5.10.1 Pump flow

Since the impellers in your pump are in series and all face in the same direction, the flow of liquid through the pump is in one direction, through each stage in turn. Pressure is added at each stage and the pressure at the last stage is the discharge pressure for which the pump is designed. Liquid enters the suction impeller through the inlet at the center. The rotation of the impeller imparts energy to the liquid causing it to be thrown outward at high velocity into the multi-vane diffuser surrounding the impeller. The energy in the liquid as it leaves the impeller appears as velocity that is converted into

OFFICIAL COPY - 001.39621.000073 - FB001 - 01 - Approved(A) - - - 07-Aug-2013 09:18 AM

pressure head in the diffuser passages. Leaving the diffuser, the liquid enters the intermediate cover [1460] where it is directed into the inlet of the next impeller. The flow follows this same sequence from the first to the last stage. The liquid from the discharge diffuser enters the pump case, and then leaves through the discharge nozzle in the case.

5.10.2 Balance

In a multi-stage, high-pressure pump, radial and axial balance is a requirement for satisfactory operation. Unbalanced radial forces cause excessive vibration, unnecessary wear, and noise. Unbalanced axial forces must be controlled to prevent damage to bearings and to the internal parts of the pump.

5.10.2.1 Radial balance

Two separate radial forces must be balanced, one dynamic, the other hydraulic. Dynamic unbalance is caused by variations in the distribution of weight in castings for impellers. The impellers in your pump have been balanced at the factory in special dynamic balance machines. Radial hydraulic unbalance is caused by unequal pressure in the liquid around the periphery of the impellers. This will create a radial thrust, and if not balanced, will cause serious shaft deflection. Radial hydraulic balance is obtained with diffusers fitted with equally spaced multiple vanes. Such diffusers will equalize the pressure at all points about the periphery of the impellers, thereby eliminating radial thrust and in turn shaft deflection.

5.10.2.2 Axial balance

In centrifugal pumps where the impellers are in a line, the differential pressure across each impeller will tend to generate a thrust towards the suction end of the pump. To compensate for this build up of thrust, your pump incorporates, at the outboard end of the shaft and inside the head, a balance drum that rotates within a balance drum bushing. The clearance between the drum and the bushing is close, so the drum acts as a piston with its inner face acted on by discharge pressure and with its outer face open to suction pressure. Thus the resultant force toward the outboard end of the pump counters the thrust acting toward the inboard end.

5.10.2.3 Balance drum piping

The balance drum piping affords an unrestricted passage between the area immediately outboard of the balance drum and the suction end of the pump, serving to reduce pressure on the outboard shaft seal as well as the balance drum. It also serves to transfer leakage past the drum to the suction system.

5.10.3 Minimum flow

Another phenomenon of the multi-stage pump is for the temperature of the liquid to rise progressively as it is pushed through the pump. If flow is reduced below the minimum required, then overheating and flashing may occur, causing severe damage to the pump. The plant's minimum flow system should ensure that the flow is kept at or above minimum, bypassing to suction the flow necessary to prevent overheating and flashing.

5.10.4 Minimum flow orifice

The minimum flow orifice is furnished with the pump for integration in the plant's piping. Design of the orifice is based on the differential of the pump minus the line loss in the plant's piping. Thus, the orifice is peculiar to each pump as well as the system in which it functions.

5.10.5 Net Positive Suction Head

Centrifugal pumps also require Net Positive Suction Head (NPSH) for proper operation. This is reflected in the pump's characteristic curve. When changing plant conditions that affect NPSH, inattention to these curves is likely to cause damage to the pump; in fact, this is a major cause of failure. For example: Throttling inlet pressure back to a point on a curve that is below the required NPSH will cause cavitation in the inlet eye resulting in immediate and major damage to the internal assembly of the pump.

5.10.6 Shaft seal

In your pump, a mechanical seal provides shaft sealing. A mechanical seal is a precision device in which the face of a mating ring on the shaft sleeve rotates against the face of a primary ring on the seal housing. The sealing faces are highly polished and run with a very thin film of cooling liquid. The seal is loaded by spring, hydraulic forces pushing against the mating ring. A seal flush system is employed to keep the mechanical seal at a nominal temperature.

5.10.7 Cooling water system

A plant-equipped cooling water system circulates water through the oil cooler, seal flush, stuffing box, and/or pump pedestal, helping to maintain the temperature of these components at the acceptable level for satisfactory operation.

5.10.8 Lube oil system

The lube oil system is an integral part of your pump. A pump mounted on the pump shaft or on the baseplate pumps lube oil from the baseplate-mounted reservoir, through supply lines and the oil cooler, to the pump bearings; the hot oil then drains back into the reservoir. The system may also include

OFFICIAL COPY - 001.39621.000073 - FB001 - 01 - Approved(A) - - - 07-Aug-2013 09:18 AM

thermometers, pressure gauges, pressure switches, relief valves, an auxiliary oil pump, and a filter.

5.10.8.1 Auxiliary oil pump

The auxiliary lube oil pump is furnished to provide lubrication for start-up, post-operation, and in the event that the main oil pump fails. This pump is driven independently but it pumps from the same reservoir as the main lube oil pump.

5.10.8.2 Pressure switch

The lube oil system is factory-equipped with a pressure switch that is set to cut out the auxiliary lube oil pump when the main lube oil pump comes up to pressure and to cut in and start the auxiliary pump for lubrication during coast-down and in case the main pump fails in service.

5.10.8.3 Pressure relief valve

Pressure of the lube oil going to feeding the bearings is controlled by a pressure relief valve. Excess lube oil is discharged by the valve directly into the lube oil reservoir. There is a pressure relief valve in both the main and auxiliary supply lines.

5.10.9 Thermal expansion

Aligning dowels and keys permit thermal expansion along the centerline of the pump and in the horizontal plane perpendicular to the centerline, while prohibiting turning, and thereby maintain the pump case in horizontal alignment with the driver. Mounting the pump case to the pedestals of the baseplate in the horizontal plane that passes through the centerline of the shaft, sometimes referred to as "centerline mounting," allows thermal growth to occur about the centerline of the shaft; thus vertical misalignment of couplings due to thermal growth is avoided.

6 MAINTENANCE

Although the centrifugal pump operates for long periods without maintenance, the operator should be alert for conditions that could impair pump operation. Based on factors such as operating hours, environment, pumpage (or flow), and age, periodic inspections and servicing requirements should be established and records kept on the quantity of the lubricating oil (lube oil) required, dates of inspection and service, and conditions observed during each inspection. Conditions to be alert for are:

1) Drop in capacity, drop in discharge pressure relative to suction pressure, or increase in power consumption of an operating pump.
2) Vibration and unusual noisy operation
3) Change of pressure in pressure reducing sleeve line.
4) Drop in lube oil pressure downstream of filter.
5) Rise in lube oil temperature at lube oil cooler outlet, radial bearing outlet, or thrust bearing outlet.
6) Rising differential pressure across lube oil filter;
7) Increased seal leakage.
8) Loosening of foundation bolts in baseplates, soleplates, or equipment hold down bolts.
9) Increased flow in the balancing flow leak-off line.

6.1 Maintenance Schedule

Periodic inspection should be external; that is neither upper bearing housings, seal units, nor the internal assembly should be removed except for:

- drop in capacity or drop in discharge pressure relative to suction pressure and
- drop in pressure or other evidence of internal wear or mechanical trouble.

6.1.1 Periodic seal replacement

To avoid unscheduled maintenance on the mechanical seal, parts should be replaced when their total operating hours reach the maximum number of operating hours that is recommended by the seal manufacturer (see seal manufacturer's drawing in Section 10).

6.1.2 Bearing housing gasket material and thickness

Most bearing housings are designed to use gaskets and some are designed to use a sealant only. When a gasket is used the gasket thickness and material are critical; both shall identical to the original.

6.1.3 Acid or caustic wash

Circulation of an acid or caustic solution through the multistage pump (for example, when cleaning the system that includes the pump) will corrode it. And more importantly solid particles from the washing action would enter the close running clearances of parts such as the pressure reducing sleeve, seals, and impellers creating severe wear. For a pump active in the wash, wear occurs simultaneously with circulation for a passive pump, wear occurs during start-up and continues until all the solid particles are flushed out with the discharge. Thus to preclude such imminent damage to a Flowserve multistage pump when using an acid or caustic wash to clean a system that includes the pump, remove the internal assembly from the case and close off the seal cavities with blank plates, which can be supplied by the factory. For further information contact your nearest Flowserve Sales Office (see section 6.2.1).

OFFICIAL COPY - 001.39621.000073 - FB001 - 01 - Approved(A) - - - 07-Aug-2013 09:18 AM

6.1.4 Lube oil system component maintenance

6.1.4.1 Replacement lube oil system component

Isolation valves permit replacement of lube oil system components without draining the piping. Hence to replace a control valve, pressure switch, temperature switch, pressure indicator, heat exchanger, lube oil filter, or lube oil pump:

1) Set pan or rags so as to catch lube oil drips.
2) Close isolation valves (see Lube Oil Console Manufacturer's Schematic in section 10).
3) Record how wiring is connected to terminals and disconnect wiring, if applicable.
4) Repair or replace component in accordance with manufacturer's instructions in section 10 or your plant data file.
5) Install new or repaired component in piping, including connection of wiring as recorded in step 3 above, if applicable.
6) Open isolation valves that were closed in step 2 above.
7) Adjust control setting of component, if applicable, as instructed by manufacturer's instructions in section 10, the lube oil system schematic drawing, or your plant data file.
8) Comply with starting the pump (section 5.7) requirements.

Flow glasses and temperature indicators in the return piping can be removed without draining the piping; follow steps 1, 3 through 5, 7, and 8 immediately above.

6.1.4.2 Repairing and adjusting lube oil system component

See manufacturer's instructions in section 10 and your plant's data file for information.

6.1.4.3 Baseplate mounted reservoir

6.1.4.3.1 Reservoir Removal

When necessary to remove the baseplate-mounted reservoir:

1) Disconnect all piping from reservoir
2) Unscrew cap screws that hold reservoir to baseplate
3) Remove reservoir from baseplate.

6.1.4.3.2 Reservoir Cleaning

Clean reservoir with petroleum base solvent such as kerosene or naphtha, or steam clean. Any residue from chemicals in the steam must be removed to prevent contamination of the lube oil.

6.1.4.3.3 Reservoir Installation

To install the baseplate-mounted reservoir:

1) Verify that reservoir is clean and in satisfactory condition.
2) Position reservoir on baseplate and secure it with cap screws.
3) Connect all piping.
4) Fill reservoir with correct lube oil (see section 10.3).

6.1.5 Preventive maintenance schedule

Refer to the below table for Maintenance schedule:

Preventive Maintenance Item	Instructions	Frequency
Suction strainer when used	Check pressure differential between the gauges. The gauges located on each side of the strainer.	Daily
Pump Suction and Discharge Flow Rates	Check suction and discharge pressure gauges for proper pump operation.	Daily
Mechanical Seal	Inspect visually	Daily
Instrumentation	Check all related pressure gauges, temperature and detectors, etc. to detect any abnormalities.	Daily
Auxiliary piping	Check for leakage around connections, etc.	Weekly
Shaft/Casing vibration	Review all vibration data for any abnormalities and/or sudden changes in levels.	Weekly
Bolting tightness	Check all external bolting for proper tightness.	Monthly
Cleanliness	General clean-up soiled areas	Quarterly
Oil system	Refer to Lubrication System section of this manual.	Periodically

Preventive Maintenance Schedule

OFFICIAL COPY - 001.39621.000073 - FB001 - 01 - Approved(A) - - - 07-Aug-2013 09:18 AM

6.2 Spare parts

6.2.1 Ordering of spares

Flowserve keep records of all pumps that have been supplied. When ordering spares the following information should be quoted:

- Pump serial number
- Pump size
- Order number
- Part name -taken from section 8
- Part number -taken from section 8
- Number of parts required -taken from section 8

The pump size and serial number are shown on the pump nameplate.

Order number should be taken from section 10.3 Customer Data sheet.

For 24-Hour part ordering service, call Flowserve Distribution Center at +1 800 526 3569.

To place an order, contact the nearest Flowserve office found at www.flowserve.com.

⚠ ***The use of parts other than Flowserve approved parts may create hazardous conditions over which Flowserve has no control. Such hazardous conditions can lead to injury, or result in damage to the equipment. Flowserve does not support nor will be responsible for the use of non Flowserve furnished parts nor the use of materials that are not as originally furnished without the expressed written approval of Flowserve.***

6.2.2 Service instructions

For 24-hour emergency field service, contact the Flowserve Service Department at +1 800 547 8671 or +1 908 859 7372 or contact the nearest Flowserve Service Center.

6.2.3 Storage of spares

Spares should be stored in a clean dry area away from vibration. Inspection and re-treatment of metallic surfaces (if necessary) with preservative is recommended at 6 monthly intervals. See section 2.4 Storage.

- See section 2.4.2 for Rotor preservative standards
- See section 2.4.2.1 for Rotor storage

6.2.4 Rotor preservative standards

1) Rotors and complete internal assemblies are fully coated with a petroleum-based rust preventative.
2) Each assembly is secured in a wood box that is lined with plastic to form a vapor barrier envelope.
3) A 1 kg (2 lb.) bag of desiccant is placed near the center of the assembly.
4) The assembly is supported under its outside diameter on wood cradles placed inside the plastic lining.

⚠ CAUTION The Internal assembly or rotor should never be supported or lifted at the journals.

6.2.4.1 Rotor storage

Factory preservative measures will protect rotors and complete internal assemblies for up to 3 years under indoor storage conditions.

6.3 Recommended spares and consumable items

A recommended spare parts classification is offered for Flowserve parts furnished on this unit. The classification of a required part can be identified by referring to the appropriate sectional drawing and parts list included in section 8 of this manual.

The recommended spare parts are divided into three classifications, which are defined below.

a) CLASS 1 (Minimum): Covers recommended spare parts for a single unit where additional spare parts are ordinarily available from branch or dealer stock. Suggested for Domestic Service handling non-corrosive liquids where interruptions in service are not objectionable. This includes gaskets and bearings that are not reusable.
b) CLASS 2 (Average): Covers recommended spare parts for a single unit where additional spare parts are not readily available. Suggested for Domestic Service handling abrasive or corrosive liquids where some interruptions in service are permissible. This includes Class 1 spares plus all renewable wear parts.
c) CLASS 3 (Maximum): Covers recommended spare parts for a single unit where maximum protection from major shutdown must be afforded. Suggested for Export Service or Domestic Service where minimum loss of service is essential. This includes Class 1 spares plus all spare rotating assembly.

OFFICIAL COPY - 001.39621.000073 - FB001 - 01 - Approved(A) - - - 07-Aug-2013 09:18 AM

The Flowserve Sales Representative in your area will gladly review the class of spares best suited to your requirement.

6.4 Maintenance tools and equipment

Normal hand tools are required for all maintenance on this equipment. Additional equipment required for specific areas of maintenance is described below.

6.4.1 Tools for Cartridge Assembly

1) A cartridge assembly tension flange,
2) Assembly skid, or equivalent removal and installation tool.
3) A winch or Roustabout,
4) Steel wedges,
5) A hoist or crane,
6) Soft cables or nylon lifting straps, and other general lifting equipment,
7) A hydraulic ram,
8) A cartridge assembly alignment tool.

6.4.2 Tools for Coupling

1) A welding torch with a Rosebud head
2) A puller capable of handling a hot half-coupling.

6.4.3 Tools for Bearings

1) A hoist and related hoisting equipment
2) Nylon lifting straps, soft cables, or equivalent

6.4.4 Tools for Casing Cover (Head)

1) Steel wedge(s)
2) Jack screws
3) A hoist, block and tackle or chain fall
4) A lifting-eye
5) A Nylon lifting straps, soft cables, or equivalent.

6.4.5 Tools for Internal Assembly

In addition to hand tools, the following tools and equipment are required to perform the assembly and disassembly tasks that are in this subsection:

1) Hoist and related hoisting equipment
2) Nylon lifting straps, soft cables, or equivalent
3) Assembly skid, or equivalent removal and installation tool.
4) For horizontal disassembly, a U-shaped assembly channel of suitable size and shape to accept internal assembly with wooden blocks at each end which are long enough to support shaft to take weight of rotor off of bushings
5) 2 roll-and-heel bars (see **Figure 6-1** Roll-and-Heel Bars)

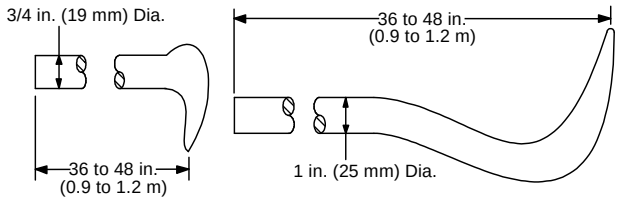

Figure 6- 1 : Roll and Heel Bars

6) Pyrometer
7) Vertical assembly apparatus which consists of:
   a) A base assembly, which consists of a base with a tube that is bushed with a soft metal bushing to hold the coupling end of the shaft and adjustable legs to support the suction spacer and stacked covers
   b) A bring with a soft metal bushing to hold the free end of the shaft and shaped to fit over the discharge spacer
   c) Studs and nuts to hold internal assembly clamped between base and ring
8) Shaft hoisting fitting (a device which will screw onto the threads for the thrust collar locknut [3712.2] and provide a means of attaching a cable)
9) Workstand or pit with steps that will permit traverse to a vertical height of approximately 3 m (10 ft.).
10) Suction spacer casing [1130] pusher adapter (a solid rectangular or circular piece of soft metal such as bronze).

6.5 Fastener torques

6.5.1 Single row cover-to-case bolting metal-to-metal gasketed joints

1) Clean and inspect each stud or bolt, nut, washer, and the facing on the flanges against which the nuts will rotate. Look for severe galling, pitting, etc. If any of the above mentioned items are damaged beyond repair, replace that item.
2) Lubricate all thread contact areas and nut facings. There are many suitable lubricants available on the market today (i.e., Fel-Pro N-5000, Never-Seize) that can be selected to provide the necessary low friction for installation and adequate anti-seize properties for high temperature applications.
3) Before tightening the studs or bolts, number each stud or bolt by following the circumferential numbering order for the appropriate bolt pattern shown in the following chart (**Figure 6-2)**.
4) Torque the studs or bolts to 30 percent of the final torque required listed in the **Table 6-1**, following the sequence printed on the studs or bolts in **Figure 6-2**. If this sequence is not

OFFICIAL COPY - 001.39621.000073 - FB001 - 01 - Approved(A) - - - 07-Aug-2013 09:18 AM

followed, the flanges can be cocked, resulting in joint leakage and possible component damage.

5) Repeat step 4, increasing torque to approximately 60 percent of the final torque required (**Table 6-1**).
6) Repeat step 4, increasing torque to 100 percent of final torque required (**Table 6-1)**.
7) Continue torquing the studs or bolts to 100 percent of final torque required (**Table 6-1**), in the sequence printed on the studs or bolts (**Figure 6-2**), until no further rotation of the nuts can be achieved. This may require several re-torquings since as one stud is torqued it will relieve the stress on the adjacent stud until an equilibrium has been achieved.
8) On high-pressure, high-temperature applications, it is recommended that the flange be re-torque to 100 percent of torque required (**Table 6-1**) after 24 hours at operating temperature and pressure to compensate for any relaxation that may have occurred.

6.5.2 Torque procedure pump foot hold- down bolts

1) Clean and inspect each stud or bolt, nut, washer, and the facing on the flanges against which the nuts will rotate. Look for severe galling, pitting, etc. If any of the above mentioned items are damaged beyond repair, replace that item.
2) Lubricate all thread contact areas and nut facings. There are many suitable lubricants available on the market today (i.e., Fel-Pro N-5000, Never-Seize) that can be selected provide the necessary low friction for installation and adequate anti-seize properties for high temperature applications.
3) Determine which end of the pump is fixed to its foundation with an alignment dowel and which end has an expansion dowel which allows thermal expansion of the case. (This information may be obtained from the Outline drawing in the back of this manual or from your plant data file.)
4) Evenly torque the pump-foot hold down bolts on the end of the pump which is fixed to the foundation to the 100% final torque value listed in **Table 6-1** below.
5) Tighten the other pump-foot hold down bolts until the spring washers on the bolts are flat, and no further.

Table 6- 1 : 100% Final Torque Values by Stud/Bolt Diameter (35 kpsi stress)

Stud/Bolt Diameter (in)	Torque Value (N-m)	Torque Value (ft-lbs)	Stud/Bolt Diameter (in)	Torque Value (N-m)	Torque Value (ft-lbs)
0.500-13UNC	40	29	1.750-8UN	2,192	1,617
0.563-12UNC	58	43	1.875-8UN	2,733	2,016
0.625-11UNC	80	59	2.000-8UN	3,356	2,475
0.750-10UNC	143	106	2.250-8UN	4,873	3,594
0.875-9UNC	232	171	2.500-8UN	6,789	5,007
1.000-8UNC	349	257	2.750-8UN	9,150	6,749
1.125-8UN	518	382	3.000-8UN	12,004	8,854
1.250-8UN	735	542	3.250-8UN	15,397	11,356
1.375-8UN	1,005	741	3.500-8UN	19,375	14.290
1.500-8UN	1,334	984	3.750-8UN	23,985	17,691
1.625-8UN	1,727	1,274	4.000-8UN	29,274	21,591

OFFICIAL COPY - 001.39621.000073 - FB001 - 01 - Approved(A) - - - 07-Aug-2013 09:18 AM

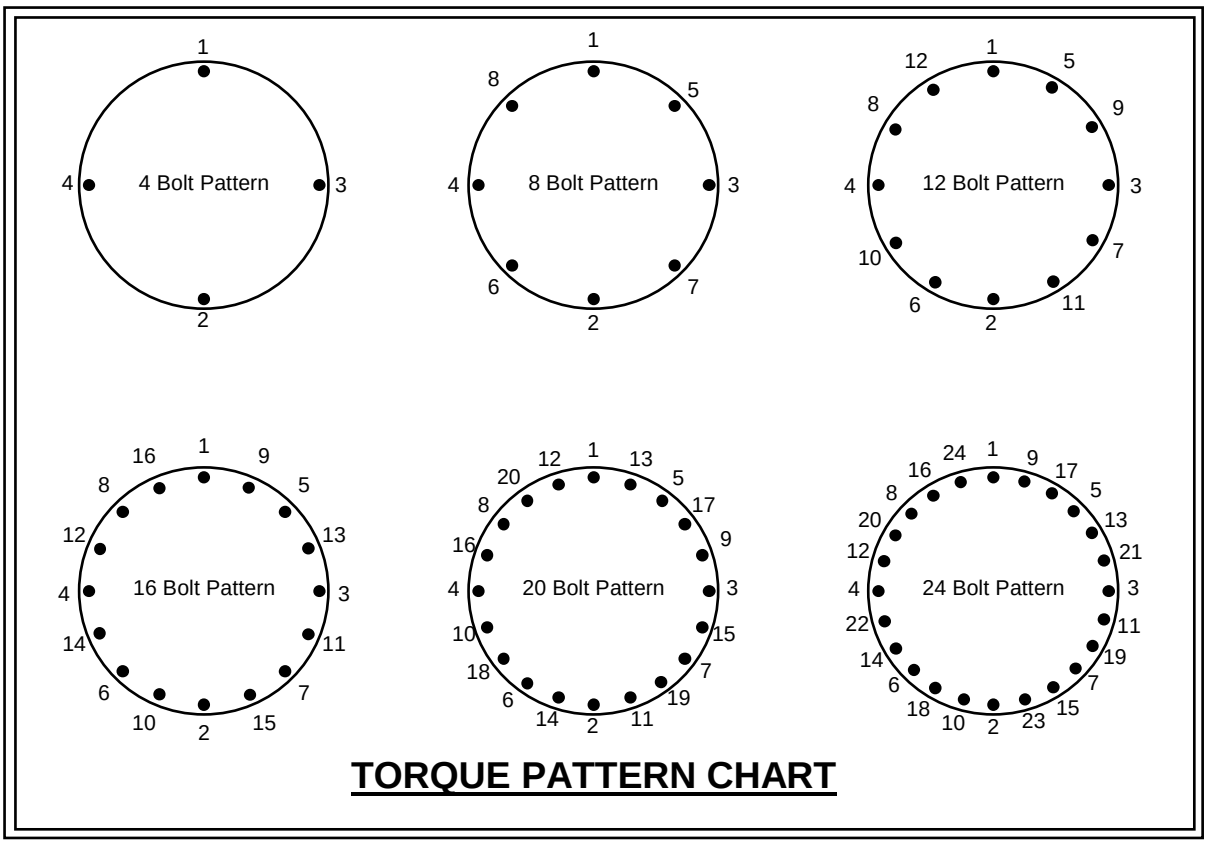

Figure 6- 2 : Torque Pattern Chart

6.6 Setting impeller clearance

Please refer to sectional drawing in section 8 or operating specification in section 10.3 for values:

- Total Element Float
- Running clearances for wear rings and bushing

6.7 Disassembly

⚠ ***Before disassembling pump, ensure that the pump driver has been turned off and tagged to prevent operation, and that the pump has been isolated from all systems, and that all fluids have been depressurized and drained. When venting or draining any vessel which contains toxic, flammable, or otherwise hazardous fluids, ensure that the vented or drained fluid is piped to a safe collector which will prevent release of the fluid into the surrounding area. Do not breathe toxic vapors. Failure to do so can result in equipment damage, personnel injury, or death.***

6.7.1 General instructions

6.7.1.1 Items and details excluded from instructions

Since removal, installation, and tightening procedures for common hardware such as bolts, nuts, keys, and connectors are apparent to the journeyman millwright, detailed steps for handling such hardware, where it is external to the pump, are not included in the repair tasks. Accordingly, removal and installation procedures are not included for piping, coolers, oil filter, and instruments (gauges, thermometers etc.). Unless there is a handling requirement that is peculiar to the pump, specific lifting and related rigging instructions are not given in this manual.

6.7.1.2 Disturbing an installation

It is unnecessary to disconnect the pump's suction and discharge piping or to change the position of either pump or driver except to remove it from the baseplate. Auxiliary piping should be disconnected only at such points as necessary for the removal of a part of the pump. When piping is disconnected, clean material such as plastic should be securely

OFFICIAL COPY - 001.39621.000073 - FB001 - 01 - Approved(A) - - - 07-Aug-2013 09:18 AM

tied over openings to prevent entrance of foreign materials.

6.7.1.3 Gaskets require consideration

When disassembling parts separated by a gasket (see assembly drawing in the back of this manual), make certain that the entire old gasket is removed. Make certain that the new gasket is of the same material and has the same thickness as the old one and that it is properly positioned for assembly.

6.7.1.4 Setscrews

Unless specified otherwise in the instructions for assembly of bearing, seal, cover, and internal assembly, stake all set-screws.

6.7.1.5 Wear parts

Before you begin to disassemble the pump, bearings, or seals, you should have on hand new replacements for those parts subject to considerable wear, abuse, or deformation such as bearing journals, thrust bearing shoes, wearing rings, bushings, O-rings, gaskets, seal bellows, seal primary rings, and seal mating rings. Of the parts named, O-rings, gaskets, and seal bellows must be new for reassembly.

6.7.1.6 Lifting

For information on lifting the baseplate with pump and driver, the baseplate with just the pump, the shaft, or the internal assembly, refer to section 2.3.

6.7.1.7 Installation schedules

For assurance that the rotor will be in its running position after installation of the internal assembly, the lower half of a bearing housing, a bearing, or a seal, Flowserve recommends the installation (or assembly) of major parts according to the schedules shown in **Figures 6-5** below, particularly whenever seals or bearings are being installed.

To use either figure, start with the part (or assembly) block in the left-hand column and follow the arrows, completing the tasks block-by-block as referenced in the right-hand column. For example: as the arrows indicate in **Figure 6-5**, the installation of an "old, unchanged bearing" is accomplished by completing those tasks that are referenced in blocks 3B, 10 or 11 (or both, depending on the actual circumstance) and block 12; but, to complete an installation of the internal assembly, as the arrows indicate, requires the accomplishment of those tasks that are identified in blocks 1 through 12.

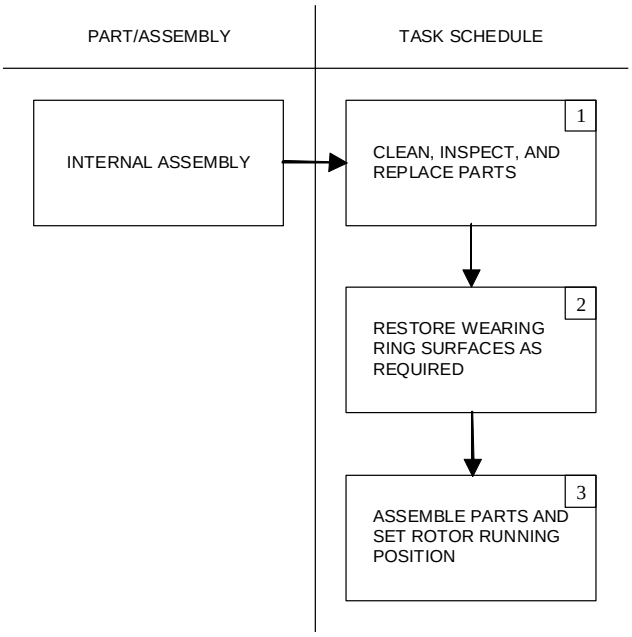

Figure 6- 3 : Task Schedule for Inspection, Repair, and Assembly of Internal Assembly

OFFICIAL COPY - 001.39621.000073 - FB001 - 01 - Approved(A) - - - 07-Aug-2013 09:18 AM

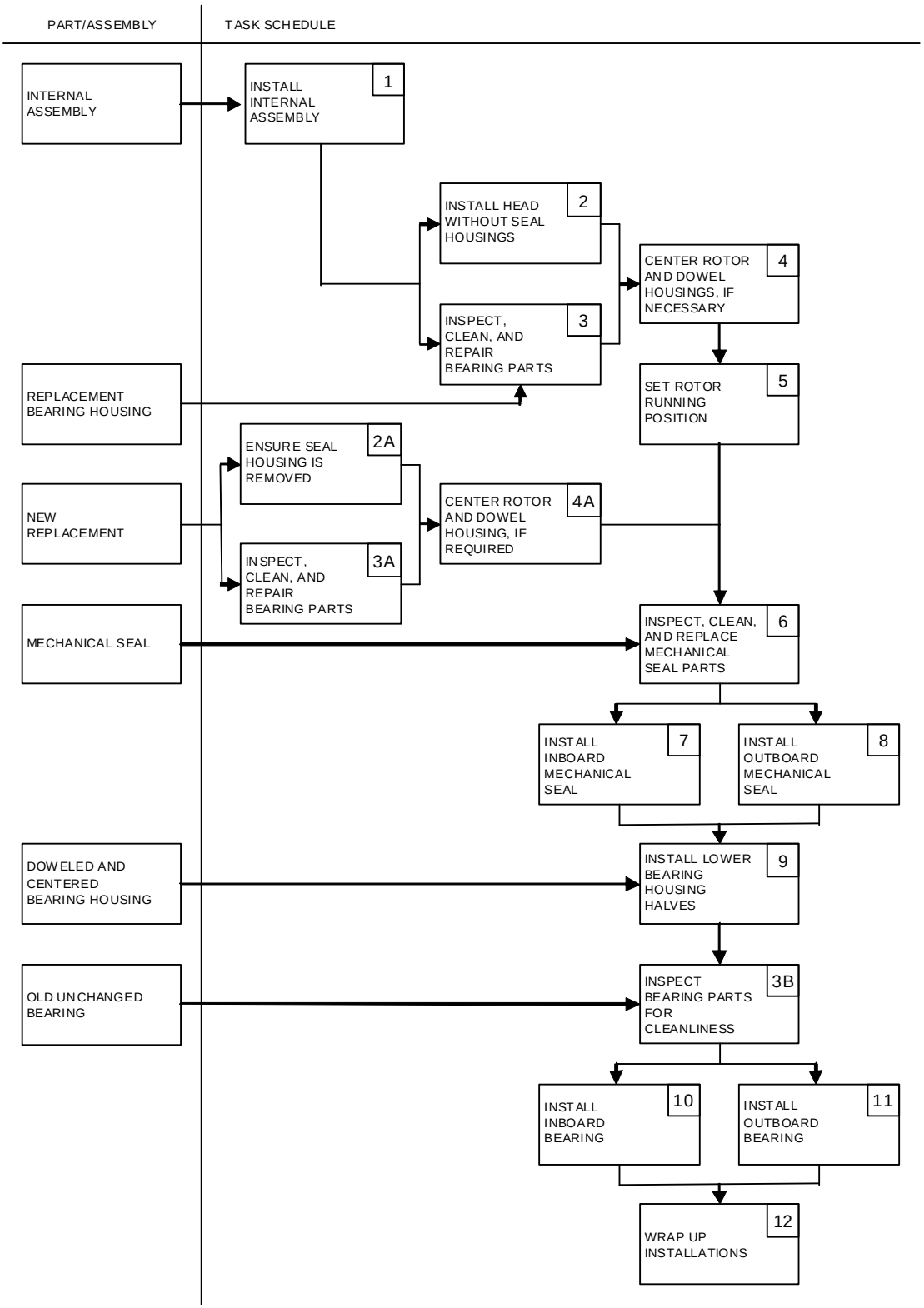

Figure 6- 4 : Task Schedule for Installation of Major Part/Assembly

OFFICIAL COPY - 001.39621.000073 - FB001 - 01 - Approved(A) - - - 07-Aug-2013 09:18 AM

6.7.2 Coupling removal

CAUTION The procedures outlined in this subsection do not apply to keyless hydraulic fit couplings. For installation or removal of such couplings, refer to the applicable drawings in the back of this manual, see section 10.

Removal of the coupling halves should be performed by application of an even heat; hammering is apt to distort the coupling or shaft or otherwise cause damage.

The following work outlines include the basic steps that must be taken to remove the half-coupling from the unit shaft. For more detailed information, see the coupling manufacturer's instructions in back of this manual, see section 10.

Complete task of removing either half-coupling usually consists of:

1) remove the spacer that interconnects half-couplings,
2) sliding sleeve (also O-ring where used) of hub-and-sleeve type half-coupling back so that it is clear of hub,
3) evenly heat hub of hub-and-sleeve type half coupling, or solid half-coupling, with welding torch until you are able to pull hub off shaft with puller, then
4) removing sleeve with O-ring inside (where applicable) and
5) removing key from shaft.

6.7.3 Removing cartridge assembly

To remove the cartridge assembly from the casing [1100], proceed as follows:

1) Remove and tag all piping, wiring, instruments, or other items which may interfere with removal of the cartridge assembly.
2) To secure the cartridge assembly, install the tension flange in place of the pump half-coupling on the shaft and secure it with the coupling nut [7411], see **Figure 6-5**: Typical Tension Flange Arrangement. Some cartridge assembly may use coupling nut [7411] and pump half coupling with the tension flange, then install the tension flange between the pump half coupling and bearing housing.

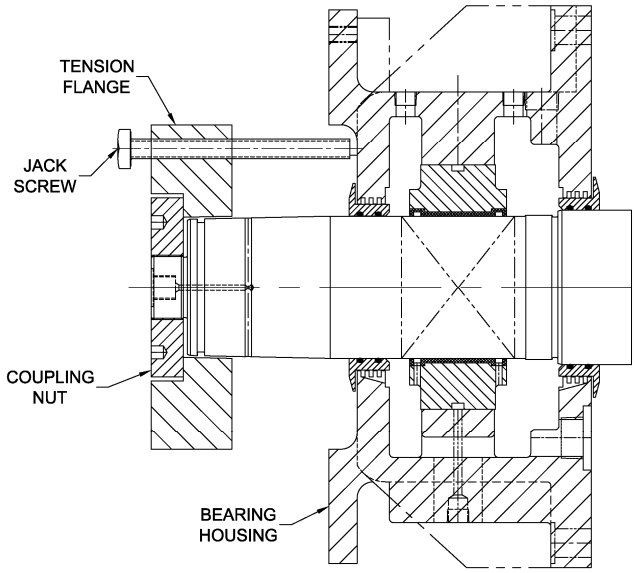

Figure 6- 5 : Typical Tension Flange Arrangement

3) Remove either the suction end plate cap screws [6570.3] or O-ring retainer cap screw [6570.3] depend on the pump.
4) Tighten the jack screws in the tension flange against the bearing housing until snug.

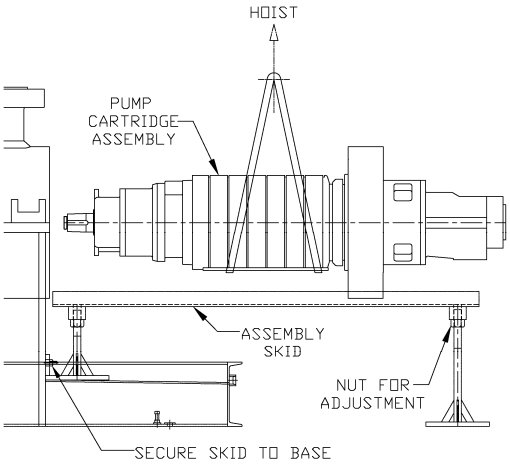

Figure 6- 6 : Typical Assembly Skid

5) Secure assembly skid (see **Figure 6-6**) or equivalent device to end of baseplate. To avoid subjecting cartridge assembly to binding or twisting stresses or having it roll off of the track, ensure:
   a) Assembly skid is aligned and leveled with bore of casing [1100]
   b) Flange of assembly skid presses solidly against the baseplate.
   c) Feet press against a solid surface across their entire area

OFFICIAL COPY - 001.39621.000073 - FB001 - 01 - Approved(A) - - - 07-Aug-2013 09:18 AM

d) Assembly skid is bolted tightly against baseplate making track completely immobile.

7) Lubricate top of track so that cartridge assembly will slide easily.
8) Remove the case stud nuts [6580.2] and washers [2905].
9) Install an eyebolt at the top of the casing cover [1221] and attach soft cables and a hoist. Tension the cables to support the weight of the head.

Note: When a pump has been in service a long time, especially in high temperature service, it may be necessary to drive a steel wedge between the head and the end of the case at three evenly spaced places around the circumference of the head before separation can be accomplished. But, when possible, push the head loose from the case with the jack screws.
The head fits closely with a clearance of 0.001 to 0.004 inch (0.03 to 0.10 millimeters) between the head and bore of the case. Hence, you must take care to pull the head straight out of the case after breaking it loose with jack screws.

10) Install jack screws in the casing cover [1221] and break the casing cover away from the casing [1100]. If necessary, drive steel wedges in between the casing cover and casing at three evenly spaced locations around casing cover to break it loose.
11) Use pry bars and a winch to pull the cartridge assembly out of casing. Pull the cartridge assembly out far enough to install a nylon lifting strap around its center of gravity, but do not pull assembly completely out of the case.
12) Place wooden blocks under casing cover [1221] to support the assembly. Remove the hoist from the eyebolt in the head and attach it to a nylon lifting strap located at the center of gravity of the assembly.
13) Carefully lift cartridge assembly off of blocks and remove it from the case. Remove the case end plate gasket [4590.4] from the case and/or case end plate and discard.
14) Install the cartridge assembly in the alignment tool (**Figure 6-7**) for transport as follows:
    a) Insert the coupling end of the cartridge assembly into the alignment tool.
    b) When the nylon strap binds, place wooden blocks under casing cover [1221] to support the assembly. Remove the hoist from the nylon lifting strap and attach it to an eyebolt in the head, and tension the cable to support the weight of the cartridge assembly.
    c) Continue to push the cartridge assembly into the alignment tool, using a hydraulic ram if necessary.
    d) Install the studs provided with alignment tool through casing cover [1221]], then secure the cartridge assembly with the spacer and nuts provided.
    e) Loosen but do not remove the tension flange jack screws.
    f) Install and tighten either the suction end plate cap screws [6570.3] or O-ring retainer cap screw [6570.3] which is applicable.

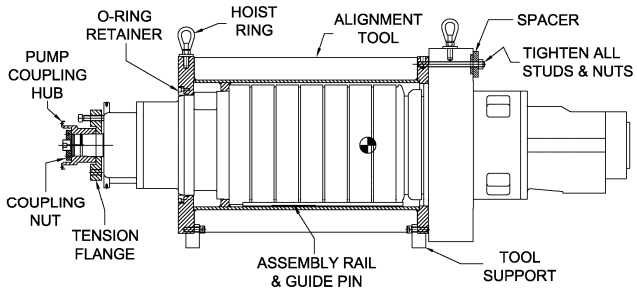

Figure 6- 7 : Typical Alignment Tool

15) Further disassembly of the cartridge assembly should be accomplished in a suitable area such as a workshop. The cartridge assembly may also be placed into storage in the alignment tool at this time until it may be serviced or reinstalled.

16) Prior to disassembly of the cartridge element, the cartridge element should be removed from the alignment tool (**Figure 6-7**) as follows:
    a) Remove either the suction end plate cap screws [6570.3] or O-ring retainer cap screw [6570.3] which is applicable.
    b) Tighten the jack screws in the tension flange against the bearing housing until snug.
    c) Install an eyebolt in the top of the casing cover [1221] and attach soft cables and a hoist. Tension the cables to support the weight of the head.
    d) Remove the studs, nuts & spacer provided with the alignment tool. Then use pry bars and a winch to pull the cartridge assembly out of the alignment tool. Pull the cartridge assembly out far enough to install a nylon lifting strap around its center of gravity, but do not pull cartridge assembly completely out of the alignment tool.
    e) Place wooden blocks under casing cover [1221] to support the assembly. Remove the hoist from the eyebolt in the head and

OFFICIAL COPY - 001.39621.000073 - FB001 - 01 - Approved(A) - - - 07-Aug-2013 09:18 AM

attach it to a nylon lifting strap located at the center of gravity of the assembly.

f) Carefully lift cartridge assembly off of blocks and remove it from the alignment tool. Place the cartridge assembly on a stand that supports the assembly under the intermediate covers [1460] and casing cover [1221], but leaves the casing cover [1221] and suction end plate [9322] free to be removed.

6.7.4 Main lube oil pump removal

These instructions provide for removal of a lubricating oil (lube oil) pump that is flange-mounted to the outboard bearing housing end cover for direct and axial coupling of its shaft with the pump shaft. If your pump is not equipped with such a lube oil pump, please disregard this section. To remove the lube oil pump proceed as follows:

1) Place container under lube oil pump and thrust bearing housing to collect drainage.
2) Drain residual lube oil from the thrust bearing housing [3230] by removing drain plug.
3) Disconnect drain pipe from thrust bearing end cover [3266].
4) Disconnect piping from lube oil pump.
5) Unbolt lube oil pump and pull it straight away from thrust bearing end cover [3266].

Note: If vibration probe or key phasor is installed, it should be unnecessary to remove them unless the outboard bearings are to be disassembled, in which case, these parts are removed with the bearing housing end cover

6) Remove spider and lube-oil-pump-to-end-plate gasket. If necessary to remove a half-coupling, remove set screw, slide half-coupling from shaft, and remove its key.

6.7.5 Bearing disassembly

1) Remove any optional equipment, wiring, or piping obstructing removal of either bearing housing. This may include temperature detectors, vibration probes, a tachometer generator, an overspeed trip, etc. Tag wires, pipe ends, and their connection points for ease of reassembly.

Note: Before removal of bearings preparatory to removal of the seal unit, it is essential to engage plate-to-sleeve retainers with the shaft sleeve. If they are left unengaged, the seal springs will expand and the shaft sleeve will move inboard to where the seal plate would prevent access to the sleeve, necessitating the removal of pieces rather than the intact seal unit.

2) If cartridge type mechanical seals are furnished, lock seal plates and shaft sleeves together. See seal manufacturer's instructions in section 10.
3) Loosen the jack screws on the cartridge assembly tension flange, then remove the coupling locknut [7411], pump half coupling (if applicable) and the cartridge assembly tension flange.
4) Move deflector [2540] or Inproseal rotors (if installed) away from bearing housings. Deflector [2540] or Inproseal rotors are held in position by either setscrews or O-ring friction. Loosen setscrews, if furnished, and pry deflector rings or rotors away with a screwdriver.

Note: If the stationary oil baffles are solid rings, then do not attempt to remove them until the bottom halves of the bearing housings have been removed.

5) Remove the thrust bearing end cover [3266], stationary oil baffle or Inproseal stator (if installed), and outer retaining plate (if applicable).
6) Remove top halves of bearing housings [3200, 3230].
7) Remove top halves of sleeve bearings [3020]. Check diametrical clearances between sleeve bearings and shaft as follows:
   a) Place Plastigage strips or lead wire at several locations on the shaft in the journal area.
   b) Reinstall the top halves of sleeve bearings [3020] and top halves of bearing housings [3200, 3230]. Bolt top halves of bearing housings tightly to bottom halves.
   c) Remove the top halves of the bearing housings [3200, 3230] and sleeve bearings [3020].
   d) If Plastigage was used, compare the width of the crushed strips with the supplied comparator to obtain the bearing clearance. If lead wire was used, then remove crushed wire and measure thickness with a micrometer to determine bearing clearance.
   e) Compare clearance obtained in step d. above with clearances specified in section 10.3 to determine if bearing replacement is necessary.
8) If there is a sensor disc located on the end of the shaft, remove the sensor disc [2900].

OFFICIAL COPY - 001.39621.000073 - FB001 - 01 - Approved(A) - - - 07-Aug-2013 09:18 AM

9) Disassemble double thrust bearing [3032] as follows:
   a) Remove thrust bearing shoes from top half of base rings. Then remove top half of base rings with leveling plates attached.
   b) Rotate bottom half of base rings to top. Remove shoes and lift off bottom halves of base rings with leveling plates attached.

Note: The CCW rotating shaft [2100] has right-hand threads on the coupling end and left-hand threads on the outboard end. Threads on the CW rotating shaft are opposite of this.

   c) Remove thrust collar locknut [3712.2] and lock washer [6541] from the shaft.

Note: If your pump is equipped with a hydraulic thrust collar, then refer to the coupling and thrust collar installation drawing at the back of this manual for removal procedure. Do not use heat to remove a hydraulic thrust collar.
If the thrust collar will not slide easily, apply heat evenly to both sides using a torch with a number 10 Rosebud head. Start from the outer periphery and work continuously in a circular path toward the center. For installation, use an oven, hot oil bath, or a torch as above. Overheating or uneven heating can distort the collar. See installation heat given in section 10.3.

   d) Remove the thrust collar [3610], thrust collar key [6700.6] (if installed), and thrust collar spacer sleeve [2460].
   e) Remove inner retainer plate (if applicable).

10) Lift shaft slightly. Rotate bottom halves of sleeve bearings [3020] to top and remove.
11) Support bottom halves of bearing housings [3200, 3230] with lifting equipment if necessary.
12) Remove housing dowels, bolting, and lower halves of housings.
13) If the sensor disc [2900] is located inboard of the thrust bearing, remove sensor disc [2900] and key.
14) Slide deflector [2540] or Inproseal rotors and stators off of the shaft [2100] with their O-rings. If the stationary oil baffles or oil seal rings are solid rings, then slide them off of the shaft with their O-rings.

6.7.6 Mechanical seal

6.7.6.1 Removing seal unit

Remove the seal unit in accordance with the seal manufacturer's installation and assembly drawing in the back of this book.

6.7.6.2 Removing seal housing

To remove either inboard or outboard seal housing (if installed) follow the task outline below:

1) Comply with instructions under removing seal unit (section 6.7.6.1) above.
2) Disconnect all piping (if installed) from seal housing.
3) Remove cap screws from seal housing, attach lifting equipment (if required), use jackscrews, if holes are provided, and remove housing.
4) Remove seal plate gasket [4590.1].
5) Detach lifting equipment from housing and move it to workbench.
6) If opposite end of pump is also equipped with seal housing, repeat steps at opposite end of pump.

6.7.7 Casing cover removal and disassembly

6.7.7.1 Removing casing cover

To remove the casing cover [1221] from the cartridge assembly, proceed as follows:

1) Remove any piping or wiring obstructing removal of casing cover [1221], if applicable (see assembly and piping drawings in the back of this manual).
2) Install lifting eye in tapped hole on top of casing cover [1221], and complete preparations for lifting casing cover [1221], then work casing cover [1221], off of balance drum [6230].
3) Transport casing cover [1221] with balance drum bushing [1600] and diffuser (if applicable) attached to shop area or set it aside.

6.7.7.2 Disassembling casing cover

To disassemble the casing cover [1221], proceed as follows:

1) Remove:
   a) Discharge diffuser (if applicable),
   b) Inner casing cover expansion gaskets [4590.2] and inner casing cover gasket disc spacers [3645], and
   c) Casing cover gasket [4590.3]

OFFICIAL COPY - 001.39621.000073 - FB001 - 01 - Approved(A) - - - 07-Aug-2013 09:18 AM

2) When removing balance drum bushing [1600], note method used by factory for retaining bushing to casing cover [1221], if any; then use rotary file and grind off tack welds or stake marks, whichever is applicable, and remove cap screws (if installed). Use jack screws in holes provided and remove bushing [1600] from casing cover [1221].

CAUTION Failure to ensure that the inner casing cover gasket disc spacers [3645] that were supplied with the pump, or precise replicas, are used in reassembly could result in improper makeup of intermediate covers [1460], the suction spacer casing [1130], and the discharge spacer casing [1140], causing recirculation, erosion, and decreased efficiency.

3) As a precaution against loss of an inner casing cover gasket disc spacer [3645], measure thickness of each spacer with a micrometer and record measurements.

6.7.8 Disassembling internal assembly

The disassembly sequence is determined by shaft design (the shaft is stepped up towards the coupling end). All parts are removed from the free end of the shaft [2100]. This manual offers two methods for disassembling the internal assembly: vertical and horizontal. The vertical method is preferred, because it reduces the chances of damaging the register faces of the intermediate cover [1460].

6.7.8.1 Interference Fit Part Removal

To remove an interference fit part, proceed with the following general procedure:

1) Before removing part, ensure that:
   a) Shaft is kept smooth and clean: scratched surfaces or dirt will further the possibility of parts seizing to the shaft [2100]
   b) Temperature of the shaft [2100] is kept within 11℃ (20℉) of ambient air temperature by cooling it with shop air, or by allowing it to cool in ambient air (do not cool the shaft by any other means)
   c) Shaft [2100] is lubricated with a lubricant that is compatible with your pumpage, such as powdery Molykote or Neolube (graphite in isopropanol)
   d) For horizontal disassembly, ensure that the weight of the discharge spacer casing [1140], intermediate covers [1460], or suction spacer casing [1130] will be supported during removal (with lifting gear, if necessary) and that the shaft [2100] is protected with heat-resistant gasket material or equivalent to prevent damage to the shaft [2100] due to dropped components

CAUTION Application of excessive heat can cause part distortion and damage. Application of insufficient heat can cause scouring of the parts when attempting removal. Ensure that the part is heated to the temperature specified in section 10.3 before removal.

2) To heat a part to its removal temperature specified in section 10.3, proceed as follows:
   a) To heat an impeller [2200], spacer sleeve, or pressure reducing balance drum [6230]: use a torch with a number 10 Rosebud head and start at the outer rim of the part, applying even heat in a continuous circular path to the center of the part until the part is heated to the temperature specified in section 10.3. Keep the shaft cool using shop air, and do not heat the hub or skirt of an impeller [2200].
   c) To heat a suction spacer casing [1130] or intermediate cover [1460]: use a torch with a number 10 Rosebud head and make uniform passes around the outer surface where the cover or spacer meets the cover that is to be removed, keeping this surface at the temperature given in section 10.3. Do not heat the entire outer surface, and do not heat the cover that is to be removed.

CAUTION Do not allow the roll-and-heel bars to slip below the cutout on the discharge spacer casing [1140], intermediate cover [1460], or suction spacer casing [1130], as this may damage the sealing faces of those components.

3) When a part has been heated to its removal temperature, use two roll-and-heel bars 180 degrees apart on the outer edge of the part to remove it from its position with quick, simultaneous prying motions.

Use lifting gear when moving any part that weighs more than 22 kg (50 lb) to prevent personnel injury and part damage due to dropping.
Always ensure that hot parts are handled with soft cables or hands protected by heat-resistant gloves to prevent personnel injury.

OFFICIAL COPY - 001.39621.000073 - FB001 - 01 - Approved(A) - - - 07-Aug-2013 09:18 AM

4) Install lifting gear on part, if necessary, then lift part clear of assembly and set it aside. Remove lifting gear.
5) Allow the shaft [2100] to cool to ambient temperature before disassembling the next stage.

6.7.8.2 Stage Number System And Balanced Parts

Each impeller key [6700.4], split ring [2531.1] (if installed), and impeller [2200] is fitted for a particular position on the shaft [2100]. To help match parts and stages, a number is stamped on the back of each part. This indicates the number of the stage for which the part is fitted. The suction impeller [2200.1] is number 1, and the numbering continues consecutively to the discharge stage. Therefore, in order to maintain dynamic balance of the rotor, it is very important to ensure that each impeller [2200], split ring [2531.1], and impeller key(s) [6700.4] is matched by stage number during disassembly and assembly.

6.7.8.3 Vertical Disassembly

The vertical disassembly procedure assumes that the coupling end of the shaft [2100] will be supported in the tube and bushings from the suction spacer casing [1130] to the end of the shaft. To disassemble the shaft [2100] in the vertical position, proceed as follows:

CAUTION Failure to clamp the unit together before moving it to the vertical position will result in damage to parts.

1) With internal assembly in a horizontal position, securely clamp internal assembly in vertical assembly apparatus and move it to the base assembly in the work area.
2) Using two hoists and soft cables (one set attached to the vertical assembly apparatus at each end of the internal assembly) slowly lift the free end while preventing the coupling end from sliding and carefully tip the unit to the vertical position. Set unit on the base assembly so that the weight of the assembly is on the suction spacer casing [1130] and the shaft [2100] is in suspension. Remove cables, hoists, and vertical assembly apparatus.

Note: See the assembly drawing in the back of this manual, to determine the method used to secure the balance drum [6230].

3) Remove balance drum split ring retainer screw [6570.5], split ring retainer ring [2530.2] and split ring [2531.2], if applicable.
4) Heat and remove balance drum [6230] using the procedure outlined in section 6.7.8.1 above. If necessary, slide the drum toward the coupling end of shaft [2100] to clear and remove split ring [2531.2] before removing sleeve. Remove the balance drum key [6700.5].
5) Remove the assembly rail [9363]
6) At the discharge stage, proceed as follows:
   a) Heat and remove the discharge impeller [2200] using the procedure outlined in section 6.7.8.1 above. Remove the split ring [2531.1] (if installed) and impeller key(s) [6700.4].
   b) Heat the intermediate cover [1460] adjacent to the discharge spacer casing [1140] using the procedure outlined in section 6.7.8.1 above. Then remove discharge spacer casing [1140].
7) At the next to last stage, and each successive stage (except the first stage) proceed as follows:
   a) Heat and remove the impeller [2200] or spacer sleeve (if installed) using the procedure outlined in section 6.7.8.1 above. Remove the split ring [2531.1] (if installed) and impeller key(s) [6700.4].
   b) Remove the intermediate cover [1460] or destaging spacer (if installed) using the procedure outlined in section 6.7.8.1 above.
8) Remove the suction impeller [2200.1] as follows:
   a) Set up soft-faced V-blocks near base assembly. The blocks should be positioned to support the shaft [2100] at points about 25% of total shaft length from the ends of the shaft. The block under the coupling end must not prevent removal of the suction impeller [2200.1] from the free end of the shaft [2100].
   b) Install shaft hoisting fitting on free end of shaft. Attach soft cable and hoist to fitting and move shaft to V-blocks. Place nylon lifting strap and hoist on coupling side of suction impeller [2200.1] and use both hoists to place shaft in V-blocks.

Note: To remove the suction Impeller [2200.1], It may be necessary to strike the impeller skirt with two soft-faced mallets at points 180 degrees apart using simultaneous blows.

OFFICIAL COPY - 001.39621.000073 - FB001 - 01 - Approved(A) - - - 07-Aug-2013 09:18 AM

c) Heat and remove suction impeller [2200.1] using the procedure outlined in section 6.7.8.1 above. Remove split ring [2531.1] (if installed) and impeller key(s) [6700.4].

9) If required, set the shaft [2100] aside by placing nylon lifting straps under each end about 25% of total shaft length away from the ends and lifting the shaft out of the V-blocks using one hoist on each strap or one hoist and a spreader bar. The shaft must be stored on a flat, solid surface, at least 150 mm (6 in.) above a metal or concrete surface. The suction spacer casing [1130] may be set aside by installing lifting gear, if required, and moving it from the base assembly to any convenient area.

6.7.8.4 Horizontal Disassembly

To disassemble the internal assembly in the horizontal position, proceed as follows:

1) Attach a soft cable or nylon lifting strap to the drip pocket of the case end plate (9322) and carefully remove it from the suction spacer (1130).
2) Set up U-shaped channel for disassembly of internal assembly.
3) Place a nylon lifting strap under intermediate cover [1460] at each end of the internal assembly so that the load is evenly distributed. Then use one hoist on each strap or one hoist and a spreader bar to lift the internal assembly and place it in the U-shaped channel. Turn the internal assembly so that the assembly rail [9363] is on top, and then remove lifting gear and assembly rail [9363].

Note: See the assembly drawing in the back of this manual, to determine the method used to secure the balance drum [6230].

4) Remove balance drum split ring retainer [2530.2] and split ring [2531.2], if applicable.
5) Heat and remove balance drum [6230] using the procedure outlined in section 6.7.8.1 above. If necessary, slide the drum toward the coupling end of shaft to clear and remove split ring [2531.2] before removing sleeve. Remove the balance drum key [6700.5].

⚠ CAUTION During horizontal disassembly you may slightly lift the shaft [2100] to take the weight of the rotor off of an impeller bushing [1610] or wearing ring [1500], making it easier to slide the impeller [2200] off of its impeller key [6700.4]. Do not lift the shaft enough to apply force to the cover or spacer as this may bend the shaft.

6) At the discharge stage, proceed as follows:
   a) Heat and remove the discharge impeller [2200] using the procedure outlined in section 6.7.8.1 above. Remove the split ring [2531.1] (if installed) and impeller key(s) [6700.4].
   b) Remove the discharge spacer casing [1140] using the procedure outlined in section 6.7.8.1 above.

7) At the next to last stage, and each successive stage (except the first stage) proceed as follows:
   a) Heat and remove the impeller [2200] or spacer sleeve (if installed) using the procedure outlined in section 6.7.8.1 above. Remove the split ring [2531.1] (if installed) and impeller key(s) [6700.4].
   b) Remove the intermediate cover [1460] or destaging spacer (if installed) using the procedure outlined in section 6.7.8.1 above.

8) At the first stage, proceed as follows:
   a) To prevent dropping the shaft [2100] in the channel after removing the suction spacer casing [1130], place two wooden blocks under the shaft [2100] to maintain its position. Place one block about 25% of total shaft length from the free end, the other next to the suction spacer casing [1130] on the free end side of the suction impeller [2200.1]. Do not place blocks under the bearing journals [3020] area of the shaft [2100].
   b) Protect the coupling end of the shaft with gasket material. Then attach lifting gear to the suction spacer casing [1130], if necessary, and move it off of the coupling end of the shaft [2100].

Note: To remove the suction impeller [2200.1], it may be necessary to strike the impeller skirt with two soft-faced mallets at points 180 degrees apart using simultaneous blows.

   c) Heat and remove suction impeller [2200.1] using the procedure outlined in section 6.7.8.1 above. Remove split ring [2531.1] (if installed) and impeller key(s) [6700].

9) If required, set the shaft aside by placing nylon lifting straps under each end about 25% of total shaft length away from the ends and

OFFICIAL COPY - 001.39621.000073 - FB001 - 01 - Approved(A) - - - 07-Aug-2013 09:18 AM

lifting the shaft out of the V-blocks using one hoist on each strap or one hoist and a spreader bar. The shaft must be stored on a flat, solid surface, or wooden blocks, at least 150 mm (6 in.) above a metal or concrete surface.

6.8 Part cleaning, inspection, and repair

This subsection identifies conditions that commonly impair the serviceability of parts, which, if not corrected could also impair operation and sometimes cause major damage. During your inspection, should you require additional information about a condition or repair which is not covered here, contact your nearest Flowserve Service Department (see section 6.2.1)

6.8.1 Cleaning

⚠ ***Petroleum solvents, alcohol, acetone and other such chemicals are injurious to health and may ignite from a spark; make certain that they are used only in a well ventilated place, away from heat, flame, and sparks.***

You should clean the casing [1100] and all metal parts with acetone, alcohol, a steam cleaner that uses demineralized water and approved chemicals, or a petroleum solvent such as naphtha or kerosene; ensure that the cleaning agent used is compatible with the pumped liquid.

Bearing housing components should be cleaned with a solvent such as naphtha or kerosene and dried with instrument air. To remove gasket sealant from bearing housings, carefully peel old film from parting surfaces. Use a plastic knife, or equivalent material that is softer than carbon steel. Clean parting surfaces with denatured alcohol or acetone.

6.8.2 Inspection and repair

6.8.2.1 General

1) Verify that all parts are free of gouges, burrs, scratches, excessive wear, and any other imperfections. Replace worn or damaged parts.
2) Ensure that all parts are free from dirt, deposits, or old gasket material. Perfectly clean and smooth surfaces are required. Any part from which deposits cannot be removed must be replaced.
3) All replacement parts must be obtained from the original equipment manufacturer to ensure proper tolerances and fit. It is unlikely that a field shop can machine the contour of a part to the close tolerance that is required to assure that the part, and in turn the assembly, will meet its design function.

6.8.2.2 Main lube oil pump

To perform any maintenance on the lube oil pump, see its manufacturer's instructions in the section 10.

6.8.2.3 Bearings

The thrust bearing shoes, base ring halves, and sleeve bearing halves must be replaced in sets.

6.8.2.4 Mechanical seal

6.8.2.4.1 Disassembling Seal Unit

After the seal unit has been removed from the pump, disassemble it in accordance with the seal manufacturer's installation and assembly drawing in the section 10.

6.8.2.4.2 Inspection and Repair

Inspect, clean, and replace seal parts in accordance with the seal manufacturer's installation and assembly drawing in section 10. Before installing the seal unit, visually inspect:

1) Shaft for cleanliness, nicks, excessive wear, burrs, and galling.
2) Seal housing for cleanliness and damage; gasket surfaces for nicks, scratches and burrs.

6.8.2.4.3 Assembling Seal Unit

After inspecting, cleaning and replacing parts in the seal unit, assemble it in accordance with the seal manufacturer's installation and assembly drawing in section 10.

6.8.2.4.4 Replacing Seal Housing Bushing

Should the pump incorporate a stuffing box bushing [4132] or throat bushing and one or both sustain deep gouges, scoring, or distortion, proceed with replacement as follows:

1) If the bushing is part of a seal housing, then ensure the seal housing is removed from the pump prior to removing bushing.
2) Depending on factory-method of retaining bushing, use rotary file and grind off tack welds or grind off stake marks and remove set screws.
3) Use aluminum drift (or equivalent) and knock out bushing.
4) Subcool new bushing in dry ice to shrink it; then bottom bushing square in bore of parent part by using aluminum drift and mallet to strike evenly around circumference of bushing.

OFFICIAL COPY - 001.39621.000073 - FB001 - 01 - Approved(A) - - - 07-Aug-2013 09:18 AM

5) Using same method as was observed in step 2 above, tack weld bushing using welding wire and gas-tungsten arc or install set screws in bushing and parent part. Stake set screws.

6.8.2.5 Casing cover

Before assembling the casing cover [1221], inspect the following:

1) Remove any traces of old gaskets from the parting surfaces of casing cover [1221], casing [1100], discharge spacer casing diffuser [1140], and inner head gasket disc spacer [3645].
2) Check discharge spacer casing diffuser [1140], balance drum bushing [1600], and casing cover [1221] for damage or corrosion that might impair efficient operation; additionally, check parting surfaces of casing [1100] and casing cover [1221] for damage that could affect sealing.
3) Verify correct running clearance between balance drum bushing [1600] and balance drum [6230] (see section 6.8.2.7.2 below).

6.8.2.6 Case End Plate

Before installing the case end plate [9322], inspect the following:

1) Remove any traces of old gasket form the parting surfaces of the case end plate [9322] and the case [1100].
2) Check case end plate [9322] for damage or corrosion that might impair efficient operation, and check parting surfaces of case end plate [9322]and case [1100] for damage which might affect sealing.

6.8.2.7 Internal assembly

Before assembling the internal assembly, inspect the following:

6.8.2.7.1 Visual Inspection

To perform a good visual inspection and to obtain the highest degree of cleanliness, which is essential to the balance of the rotating parts and the correct fit of all internal parts (rotating and stationary) ensure that all parts are disassembled, including all those on the shaft. The visual inspection consists of examining these parts for those conditions that commonly impair operation. Parts and conditions are listed below. Where corrective action may not be apparent to a journeyman millwright or a more extensive examination is required, the inspection item is cross-referenced to a detailed procedure. Inspect:

1) Shaft [2100] for scratches, nicks, burrs, and distortion; absolutely smooth surfaces and a straight shaft are required (see section 6.8.2.7.3 below).
2) All internal castings (intermediate covers, impellers, etc.) for erosion and other damage such as nicks, gouges and cracks must be corrected before final assembly.
3) Dowels for distortion, cracks, burrs, and proper fit; dowel holes for damage and elliptic shape.
4) Abutting faces and running surfaces of impeller hubs and skirts, shaft sleeves, pressure reducing sleeve, wearing rings, bushings, all internal castings, for nicks, burrs, scratches and scouring-concentric and absolutely smooth surfaces are required.
5) Pressure reducing sleeve/bushing, wearing rings, and bushings for excessive wear (see section 6.8.2.7.2 below).
6) Impeller bores and pressure reducing sleeve bore for correct fit with shaft (see section 6.8.2.7.4 below).
7) Impeller hub and skirt for roundness by taking micrometer readings of their diameters at 90 degree intervals. For corrective action (see section 6.8.2.7.6 below).
8) Split rings and shoulder ring for burrs, nicks and gouges.
9) O-ring grooves in shaft sleeve for nicks, burrs, and scratches-absolutely smooth surfaces are required.
10) Rotating assembly for nominal concentricity (see section 6.8.2.7.5 below).

6.8.2.7.2 Checking Running Clearances

Actual running clearance is determined by measuring the inside diameter of the stationary part and the outside diameter of the rotating part and taking the difference. Measurements should be taken with a micrometer and each part should be checked for trueness or roundness by taking diametrical readings 90 degrees apart. To where replacement of a part is advisable, compare the actual clearance with the design clearance that is listed under section 10.3, then, consider the wear (that is, actual clearance minus design clearance) with respect to the general statement under section 10.3 concerning restoration of mechanical and hydraulic efficiency and decide whether to restore design clearance. Before final assembly, the trueness and the running clearance of the following should be checked:

1) Balance drum [6230] and bushing [1600]; replace parts if running clearance exceeds the recommendation under section 10.3 or parts do not run true. Since the parts are designed with a specific area for balancing hydraulic

OFFICIAL COPY - 001.39621.000073 - FB001 - 01 - Approved(A) - - - 07-Aug-2013 09:18 AM

forces, the part should be replaced rather than repaired.

2) Each bushing [1610] and impeller hub [2200], or impeller wearing ring when installed; restore running clearance that is recommended under section 10.3 and trueness according to instructions under section 6.8.2.7.6 or section 6.8.2.7.7 and section 6.8.2.7.8 below.
3) Each stationary casing wearing ring [1500] and impeller skirt or impeller wearing ring, when installed; restore running clearance that is recommended under section 10.3 and trueness according to instructions under section 6.8.2.7.6 or section 6.8.2.7.7 and section 6.8.2.7.8 below.

6.8.2.7.3 Checking Shaft Straightness

CAUTION Application of heat to straighten shaft [2100] will cause more distortion.

Note: The term "soft-faced V-blocks" refers to V-Blocks faced with metal that is softer than the shaft, for example, V-blocks faced with copper.

After the shaft [2100] is inspected for damage as described above, it must be checked for straightness before reassembling rotating parts. When making the check, do not turn shaft on its lathe centers. It is possible for the lathe centers of a straight shaft to be off center slightly, resulting in a false indication of a bent shaft. The task requires:

1) Setting bearing journals of shaft in soft V-blocks (or equivalent), and
2) Checking straightness by taking dial indicator readings all along the shaft [2100] while it is rotated but particularly at bearing journal [3020] areas and adjacent to the ends of coupling keyway [6700.1]; total runout of shaft shall not exceed maximum given in section 10.3. If runout is exceeded, shaft must be cold straightened or replaced.

6.8.2.7.4 Checking Fit of Impellers and Balance Drum with Shaft

The fit of each impeller [2200] bore around the shaft [2100] at the designated stage of each impeller (see impeller numbering under section 6.7.8.2) and the fit of the pressure reducing balance drum [6230] bore around the shaft must be correct or vibration is apt to occur. Proceed as follows:

1) Verify shaft straightness (see section 6.8.2.7.3 above).

Note: A three-point micrometer is the preferred instrument for measuring bore; a stick micrometer is its alternate. When measuring with the three-point micrometer, measure close to the keyway; with stick micrometer, measure at 90 degree intervals.

2) Determine nominal interference fit of impellers [2200] with shaft [2100] by:
   a) Using micrometers to measure diameter of bore under thickest metal near each end of keyway of impeller and the corresponding diameter of shaft, then,
   b) Comparing diameter of bore of impeller [2200] with corresponding diameter of shaft [2100]; diameter of bore of impeller shall be slightly smaller than corresponding diameter of shaft by amount given in section 10.3.
3) Determine nominal fit of balance drum [6230] with shaft by:
   a) Using micrometers to measure diameter of bore at each end of balance drum [6230] and the corresponding diameter of shaft [2100], then,
   b) Comparing diameter of bore of balance drum [6230] with the corresponding diameter of shaft [2100]; diameter of bore of drum sleeve shall be slightly smaller than corresponding diameter of shaft by amount given in section 10.3.

Note: If the fit of an Impeller [2200] or the balance drum [6230] with the shaft [2100] is not as given in the section 10.3, contact your nearest Flowserve Sales Office for recommendations concerning your particular circumstance (see section 6.2.1).

6.8.2.7.5 Checking Concentricity Of Rotating Assembly

Whenever the internal assembly has been dismantled, the concentricity of the rotating assembly (see assembly drawing) must be verified before assembly. To vertically assemble the rotating assembly, proceed as follows:

1) Assure yourself that you have complied with the instructions above under the headings:
   a) Cleaning, sections 6.8.1,
   b) Visual inspection, section 6.8.2.7.1,
   c) Checking running clearance, section 6.8.2.7.2,

OFFICIAL COPY - 001.39621.000073 - FB001 - 01 - Approved(A) - - - 07-Aug-2013 09:18 AM

d) Checking shaft straightness, section 6.8.2.7.3, and
e) Checking fit of impellers and balancing drum with shaft, section 6.8.2.7.4.

2) Before starting to assemble parts, see paragraph titled stage number system and balanced parts (section 6.7.8.2) above, for a description of the impeller [2200], impeller key [6700.4], and split ring [2531] numbering system.

Note: If Impellers [2200] are equipped with wearing rings [2300], see that rings are completely installed. Rotor shall be assembled as it is to operate in the pump.

3) Assemble rotor:
   a) Install rotating parts only on shaft [2100].
   b) Use instructions and sequence from below.

4) Wrap nylon lifting strap around shaft [2100] between first and second-stage impellers [2200], and attach hoist. Using both hoists, tip rotor until it is horizontal. Place bearing surfaces in soft-faced V-blocks (or equivalent)

Note: Rotating parts must be at room temperature when performing step 5.

5) With bearing surfaces in soft-faced V-blocks (or equivalent), rotate element and take readings with dial indicator at several place on shaft [2100], center of pressure reducing balance drum [6230], and surfaces of each impeller hub and skirt. Verify that total runout does not exceed maximum given in section 10.3.

CAUTION Should total runout exceed maximum given in section 10.3, the cause must be determined before proceeding further. Usually excessive runout is caused by a wrong part or improper assembly procedure

6) With concentricity of rotating assembly verified and with rotor still in V-blocks, strip the shaft [2100] by following the instructions and sequence from disassembling internal assembly (section 6.7.8) above.

6.8.2.7.6 Renewing Impeller Wearing Surfaces

If the impeller is not equipped with a wearing ring, the skirt and hub wearing surfaces may be ground lightly to restore concentricity; however, to provide assurance that the design features of the impeller [2200] are retained and that pump operation will not be impaired by the renewing process, there are conditions to meet:

1) The original diameter of skirt or hub must never be decreased by more than maximum decrease given in section 10.3.
2) The impeller [2200] bore must be true (see checking fit of impeller and balancing drum with shaft (section 6.8.2.7.4) above and must be perfectly centered while grinding so that skirt and hub wearing surfaces run true to shaft [2100] bore. The surface shall be finished as specified in section 10.3.
3) The impeller [2200] must be dynamically or two-plane balanced. To achieve balance, metal should be ground off the outside surface of the shroud but to avoid weakening the shroud, not from one spot.
4) New undersized stationary wearing rings [1500] and bushings [1600 &1610] must be installed to maintain the proper running clearance (see section 6.8.2.7.2) above. For details about obtaining undersized parts from Flowserve Service Department, see section 6.2.1
5) A record should be kept of the decrease in skirt and hub diameters and the undersize of wearing rings and bushings.

6.8.2.7.7 Replacing Stationary Wearing Rings

The instructions in this paragraph apply to replacement of wearing rings [1500] in stationary parts. Unless the impeller skirt wearing surface has been, or is to be, ground down see renewing impeller wearing surfaces (section 6.8.2.7.6) above, a wearing ring [1500] with finish stock left on the running surface, or the standard size wearing ring [1500], should be used for replacement. A wearing ring [1500], whether standard or undersize, is manufactured to be pressed into its parent part. The following procedure will guide you in the replacement of a wearing ring:

CAUTION Striking or cutting into parent metal of stationary part will make replacement necessary.

1) Machine off, or using rotary file grind off, welds that wear ring locking keys [6700.3] to metal of parent part or drill out set screws, whichever is applicable.
2) Press out or using aluminum drift (or equivalent), knockout wearing ring [1500].

OFFICIAL COPY - 001.39621.000073 - FB001 - 01 - Approved(A) - - - 07-Aug-2013 09:18 AM

3) See that requirements under visual inspection (section 6.8.2.7.1) above which apply to wear rings [1500] are in compliance with for new ring.
4) See that temperature of parent part is above 21℃ (70℉).

CAUTION Do not bind or otherwise cause undue stress on wearing ring [1500].

5) Sub-cool new wearing ring [1500] in dry ice to shrink it; then, bottom ring squarely in bore of parent part by using aluminum drift and mallet to strike evenly around circumference of wearing ring.
6) Determine that wearing ring [1500] and parent part have warmed to ambient temperature by feeling with hand.
7) If the replacement wearing ring [1500] has not been furnished with finish stock left on the running surface, then verify trueness of wearing-ring-to-part fit as outlined below or by an equivalent technique:
   a) Set part face down on table of vertical lathe and parallel with face of table.
   b) Align centerline of part with centerline of table using register face of part as true side of dial indicator; alignment shall be within limit given in section 10.3.
   c) Clamp around part to hold it in centered and parallel position.
   d) Set up dial indicator to run on the inside diameter of wearing ring [1500] and rotate table; total runout shall not exceed maximum given in section 10.3.
8) Install new wear ring locking keys [6700.3] and tack weld them to metal of parent part using gas-tungsten arc and appropriate wire. Note: some installations use interference fit only to secure ring. Then repeat step 7.
9) If the replacement wearing ring [1500] has been furnished with finish stock left on the running surface, true cut the wearing ring [1500] using the following procedure, or an equivalent:
   a) Center the parent part on a vertical lathe by following steps 7a through 7c above.
   b) Machine the finish stock from the inside diameter of the wearing ring [1500] to meet the clearances specified in section 10.3.
10) Verify trueness of wearing-ring-to-part fit as outlined in step 7 above.
11) See that there is no damage to the wearing surface.

6.8.2.7.8 Replacing Bushings

These instructions apply to the replacement of bushings [1610] in intermediate covers [1460] or volutes. Unless the impeller [2200] hub wearing surface has been, or is to be, ground down see renewing impeller wearing surface (section 6.8.2.7.6) above, the standard size bushing [1610] should be used for replacement. A bushing [1610], whether standard or undersize, is manufactured to be pressed into the parent part. The following procedure will guide you in replacing a bushing [1610].

CAUTION Striking or cutting into metal of parent part will make replacement necessary.

1) Machine off, or using rotary file grind off, welds that wear ring locking keys [6700.3] to metal of parent part or that retain bushing [1610] directly to parent part.
2) Press out or using aluminum drift (or equivalent), knock out bushing [1610].
3) See that requirements under visual inspection (section 6.8.2.7.1) above which apply to bushings [1610] are complied with.
4) See that temperature of parent part is above 21℃ (70℉).

CAUTION Do not bind or otherwise cause undue stress on bushing [1610].

5) Sub-cool bushing [1610] in dry ice to shrink it; then, bottom bushing,[1610] squarely in bore of parent part by using aluminum drift and mallet to strike evenly around circumference of bushing [1610].
6) Determine that bushing [1610] and parent part have warmed to ambient temperature by feeling with hand.
7) If the replacement bushing [1610] has not been furnished with finish stock left on the running surface, then verify trueness of wearing-ring-to-part fit as outlined below or by an equivalent technique:
   a) Set part face down on table of vertical lathe and parallel with face of table.
   b) Align centerline of part with centerline of table using register face of part as true side of dial indicator; alignment shall be within limit given in section 10.3.
   c) Clamp around part to hold it in centered and parallel position.
   d) Set up dial indicator to run on inside diameter of bushing [1610] and rotate

OFFICIAL COPY - 001.39621.000073 - FB001 - 01 - Approved(A) - - - 07-Aug-2013 09:18 AM

table; total runout shall not exceed maximum given in section 10.3.

8) Install new wear ring locking keys [6700.3] and tack weld them to metal of parent part using gas-tungsten arc and appropriate wire. Note: some installations use interference fit only to secure ring. Then repeat step 7.
9) If the replacement bushing [1610] has been furnished with finish stock left on the running surface, true cut the bushing [1610] using the following procedure, or an equivalent:
   a) Center the parent part on a vertical lathe by following steps 7a through 7c above.
   b) Machine the finish stock from the inside diameter of the bushing [1610] to meet the clearances specified in section 10.3.
10) Verify trueness of bushing-to-part fit as outlined in step 7 above.
11) See that there is no damage to the bushing surface.

6.8.2.7.9 Replacing Impeller Wearing Rings

Unless the impeller skirt wearing surface has been ground down, the standard size wearing ring should be used for replacement. To replace an impeller wearing ring [2300] proceed as follows:

CAUTION Striking or cutting into parent metal of impeller will make replacement necessary.

1) Remove wearing ring retainers:
   a) Machine off or using rotary file grind off, tack welds that hold wear rings [2300] to impeller [2200].
   b) If tack welds were used machine or grind off welds.
2) Block or suspend impeller face down. Apply heat to ring only, evenly and quickly, using a torch with a Rosebud head. The wear ring [2300] will normally fall off. If not, tap wear ring [2300] off or use two pry bars at diametrically opposite points and pry it free of impeller [2200]. Alternately, wear ring [2300] can be machined off impeller [2200].
3) See that requirements under visual inspection (section 6.8.2.7.1) above, which apply to impeller wearing rings [2300], are complied with for the new ring.

CAUTION Do not bind or otherwise cause undue stress on wearing rings [2300].

4) Determine that impeller [2200] has cooled to ambient temperature by feeling with hand then heat wearing ring as described in step 2 until ring will slip into place on skirt.
5) If the replacement wearing ring [2300] has not been furnished with finish stock left on the running surface, then verify trueness of wearing-ring-to-impeller fit as outlined below or by an equivalent technique:
   a) Set impeller [2200] face down on table of vertical lathe and parallel with face of table.
   b) Align centerline of part with centerline of table using register face of part as true side of dial indicator; alignment shall be within limit given in section 10.3.
   c) Clamp around part to hold it in centered and parallel position.
   d) Set up dial indicator to run on outside diameter of wearing ring [2300] and rotate table; total runout shall not exceed maximum given in section 10.3.
6) Install new retainer and tack weld them to metal of parent part using gas-tungsten arc and appropriate wire. Note: some installations use interference fit only to secure wear ring [2300]. Then repeat step 7.
7) If the replacement wearing ring [2300] has been furnished with finish stock left on the running surface, true cut the wearing ring using the following procedure, or an equivalent:
   a) Center the parent part on a vertical lathe by following steps 7a through 7c above.
   b) Machine the finish stock from the outside diameter of the wearing ring [2300] to meet the clearances specified in section 10.3.
8) Verify trueness of wearing-ring-to-part fit as outlined in step 7 above.
9) See that there is no damage to the wea ring [2300] surface.

6.9 Pump Assembly

6.9.1 Internal Assembly

To assemble the internal assembly, proceed as follows:

6.9.1.1 Interference Fit Part Installation

To install an interference fit part, proceed with the following general procedure:

1) Before installing part, ensure that:
   a) The shaft [2100], impeller [2200] and sleeve [6230] bores, split rings [2531], and keys [6700] are kept clean and smooth: scratched surfaces or dirt increase the chance of parts seizing
   b) Temperature of shaft [2100] is kept within 11℃ (20℉) of ambient temperature by

OFFICIAL COPY - 001.39621.000073 - FB001 - 01 - Approved(A) - - - 07-Aug-2013 09:18 AM

cooling it with shop air or by allowing it to be cooled by ambient air (do not use any other means to cool shaft)

c) The shaft [2100], wearing rings 1500], bushings [1600 & 1610], and impeller [2200] hubs are lubricated with a lubricant that is compatible with your pumpage such as powdery Molykote or Neolube (graphite in isopropanol)

CAUTION Application of excessive heat can cause part distortion and damage. Application of insufficient heat can cause scouring of the parts when attempting installation. Ensure that the part is heated to the temperature specified in section 10.3 before installation.

2) To heat a part to its installation temperature specified in section 10.3, proceed as follows:
   a) Heat the impellers [2200], pressure reducing balance drum [6230], and spacer sleeve (if installed) in an oven to their required installation temperature as given in section 10.3. For best results, start with the suction impeller [2200.1] and place as many impellers [2200] in the oven as possible in stage sequence. Then, as impellers [2200] are removed for installation, place the next impeller [2200] in sequence into the oven. This will avoid delay in the assembly process.
   b) If an oven is not available, then heat the impellers [2200] or sleeves [6230] as each is to be installed using two torches with number 10 Rosebud heads. Heat the impeller [2200] or sleeve [6230] evenly by working the torches in a continuous circular path from the outer rim to the center, using the two torches to heat both sides simultaneously, until it reaches the installation temperature specified in section 10.3.
   c) To heat a suction spacer casing [1130] or intermediate cover [1460]: use a torch with a number 10 Rosebud head and make uniform passes around the outer surface where the cover or spacer meets the cover that is to be installed, keeping this surface at the temperature given in section 10.3. Do not heat the entire outer surface, and do not heat the cover that is to be installed.

Use lifting gear when moving any part that weighs more than 22 kg (50 lb) to prevent personnel injury and part damage due to dropping.
Always ensure that hot parts are handled with soft cables or hands protected by heat-resistant gloves to prevent personnel injury.

3) When a part has been heated to its installation temperature, then install lifting gear on the part, if required, and install the part on the assembly. Remove lifting gear, if installed.
4) Before continuing on to next stage, cool shaft [2100] and impeller [2200] or sleeve [6230] to within 11℃ (20℉) of ambient temperature using shop air or by allowing ambient air to cool them. Do not use any other means to cool parts

6.9.1.2 Vertical Assembly

Parts that make up the internal assembly are precision finished with close clearances between rotating and stationary parts; thus, utmost care must be taken to properly assemble parts and ensure that specified clearances and dynamic balance are maintained. Horizontal assembly of the internal assembly is not allowed. To vertically assemble the internal assembly, proceed as follows:

Note: The vertically held shaft [2100] and suction spacer casing [1130] must be in correct relationship or the assembly will not be correct. Therefore, the base assembly must allow for adjustment of the height of either the shaft [2100] or suction spacer casing [1130].

1) Set up base assembly in work area.
2) Set up soft-faced V-blocks near base assembly spaced to support the shaft at about 25% of total shaft length from each end. Block under coupling end must not impede movement of suction impeller [2200.1] into place. Place two nylon lifting straps under shaft [2100] about 25% of shaft length from each end. Then, using one hoist for each strap or one hoist with a spreader bar, lift the shaft [2100] and place it in the V-blocks.
3) Assemble suction impeller [2200.1] as follows:
   a) Install first stage split ring [2531.1] (if installed) and impeller key(s) [6700.4], ensuring that ends of split ring match evenly.
   b) Install the suction impeller [2200.1] on the impeller key [6700.4] and against the split ring [2531.1] (or shaft shoulder, if no split ring is installed) using the procedure

OFFICIAL COPY - 001.39621.000073 - FB001 - 01 - Approved(A) - - - 07-Aug-2013 09:18 AM

outlined in interference fit part installation (section 6.9.1.1) above.

4) Place the shaft on the base assembly as follows:
   a) Install lifting gear, if necessary, on the suction spacer casing [1130] and place it on the legs of the base assembly. Remove lifting gear, if installed.
   b) Install shaft hoisting fitting on thrust collar locknut [3712.2] threads at free end of shaft [2100].
   c) With nylon lifting strap under shaft [2100] at coupling side of suction impeller [2200.1] and soft cable in shaft hoisting fitting, use two hoists to lift the shaft [2100] into a vertical position. Remove the nylon lifting strap.
   d) Set coupling end of shaft [2100] into base assembly. Remove the lifting gear and shaft hoisting fitting.
5) Adjust the legs of the base assembly so that the inboard edge of the suction impeller [2200.1] shroud vane passage area is flush with the adjacent face of the suction spacer casing [1130].
6) Assemble the remaining stages, except the discharge stage, as follows:
   a) Install the intermediate cover [1460] or destaging spacer (if installed) using the procedure outlined in interference fit part installation (section 6.9.1.1) above. Ensure that the assembly rail slots in the covers are aligned by test fitting the assembly rail [9363] after each cover is installed.
   b) Install split ring [2531.1] (if installed) and impeller key(s) [6700.4], ensuring that ends of split ring [2531.1] match evenly.
   c) Install the impeller [2200] on the impeller key(s) [6700.4] and against the split ring [2531.1] (or shaft shoulder, if no split ring is installed), using the procedure outlined in interference fit part installation (section 6.9.1.1) above.
7) Assemble the discharge stage as follows:
   a) Install the discharge spacer casing [1140] using the procedure outlined in interference fit part installation (section 6.9.1.1) above. Install the assembly rail [9363] in slots in covers.
   b) Install split ring [2531.1] (if installed) and impeller key(s) [6700.4], ensuring that ends of split ring [2531.1] match evenly.
   c) Install the impeller [2200] on the impeller key(s) [6700.4] and against the split ring [2531.1] (or shaft shoulder, if no split ring is installed), using the procedure outlined in interference fit part installation (section 6.9.1.1) above.
8) Install balance drum key [6700.5]

Note: See the ASSEMBLY drawing in the back of this manual, to determine the method used to secure the balance drum [6230].

9) Install the balance drum [6230] on key [6700.5] using procedure outlined in interference fit part installation (section 6.9.1.1) above, then:
   a) install split ring [2531.2] and retainer [2530.2], or
   b) slide hot sleeve [6230] toward coupling end to clear shaft shoulder, install split ring [2531.2], reheat sleeve [6230] as necessary, and move sleeve [6230] towards free end to retain split ring [2531.2].

⚠ CAUTION Failure to clamp assembly together before moving it to the horizontal position will result in component damage.

10) Securely clamp assembly in vertical assembly apparatus.
11) With one hoist attached to each end of the vertical assembly apparatus with soft cables, tip the internal assembly into a horizontal position and position it so that the intermediate cover [1460] rest on wooden blocks. Remove the lifting gear and vertical assembly apparatus.

⚠ CAUTION If the axial movement of the shaft [2100] or the running position of the impeller(s) [2200] is not within tolerance, the internal assembly has probably been assembled incorrectly or with improper parts. The cause must be located and corrected before the internal assembly is installed in the case.

12) Determine and record the rotor lateral movement as described in **Figure 6-8** Rotor Lateral Movement below.

OFFICIAL COPY - 001.39621.000073 - FB001 - 01 - Approved(A) - - - 07-Aug-2013 09:18 AM

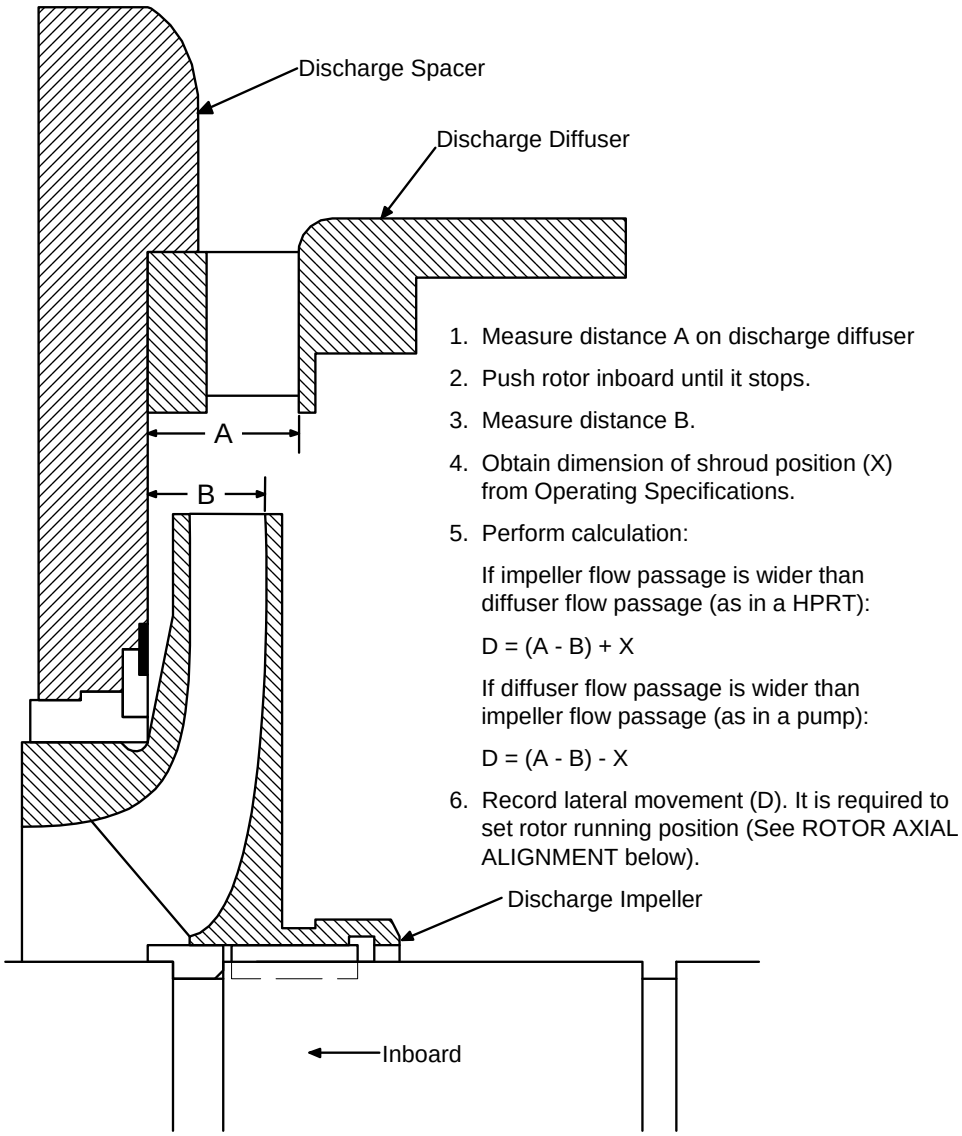

Figure 6- 8 : Rotor Lateral Movement

6.9.2 Casing Cover

The casing cover [1221] fits closely with a clearance of 0.03 to 0.10 mm (0.001 to 0.004 in.) between the casing cover [1221] and bore of the casing [1100]. Hence, you must take care to pull the casing cover [1221] straight out of the casing [1100] after breaking it loose with jack screws; conversely, the casing cover [1221] must be pushed straight into the casing [1100].

6.9.2.1 Assembling Casing Cover

Proceed with the assembly of the casing cover [1221] as follows:

Note: For guidance in tack welding replacement parts, contact your nearest Flowserve Sales Office (see section 6.2.1).

1) Cool balance drum bushing [1600] in dry ice to shrink it enough to slide it into casing cover. Secure bushing with method employed originally by the factory, see step 2 under disassembling casing cover (section 6.7.7.2).

⚠ CAUTION Failure to use Inner head expansion gaskets [4590.2] and spacers [3645] that are of the same thickness, diameter, material, quality, and quantity as those supplied originally with the pump could result in improper makeup of diffusers, the suction spacer casing [1130], and the discharge

OFFICIAL COPY - 001.39621.000073 - FB001 - 01 - Approved(A) - - - 07-Aug-2013 09:18 AM

spacer casing [1140], causing recirculation within the pump and in turn erosion, particularly at its high pressure end, and decreased efficiency.

2) Install original inner head disc spacers [3645], or precise replicas, see step 3 under disassembling casing cover (section 6.7.7.2), and new inner head expansion gaskets [4590.2] so that they are arranged as shown in the assembly drawing (a spacer does not have a particular position other than between gaskets).
3) Install discharge spacer casing [1140] on casing cover [1221] (if applicable).

6.9.2.2 Installing Casing Cover

Install lifting-eye in casing cover [1221], lift casing cover [1221], and move it into place on balance drum [6230]. Push casing cover [1221] onto balance drum [6230] as far as possible. Ensure that the discharge spacer [1140], and expansion compensator gaskets [4590.2] and disc spacers [3645] are properly aligned with the casing cover [1221]. Remove lifting-eye and lifting equipment.

6.9.3 Rotor Alignment

Following installation of a new sleeve bearing, a new bearing housing, or an internal assembly, rotor centering in accordance with the following procedure is necessary. After each installation of the internal assembly and casing cover, the rotor must be aligned axially as described below.

6.9.3.1 Alignment Preparation

To prepare the cartridge assembly for rotor alignment, proceed as follows:

1) Using lifting gear, install the suction end plate [9322] on the suction spacer [1130]. Remove lifting gear from suction spacer [1130].
2) Install the radial and thrust bearings as follows:
   a) If the sensor disk [2900] is located inboard of the thrust bearing, install sensor disk and key.
   b) Install lower bearing housings [3200/3230], bolting, and dowels.
   c) Oil all part surfaces before installing.
   d) Raise shaft slightly and roll lower sleeve bearing halves [3020] into bearing housings [3200/3230]. Place upper sleeve bearing halves on top of lower halves.

Note: If your pump is equipped with a hydraulic thrust collar, then refer to the COUPLING AND THRUST COLLAR INSTALLATION drawing at the back of this manual for installation procedure. Do not use heat to install a hydraulic thrust collar.

   e) Install inner retaining plate (if applicable), thrust collar spacer sleeve (2460), and thrust collar key [6700.6] (if installed). Heat thrust collar [3610] to the part installation heat specified in section 10.3 Operating Specification and slide onto shaft.
   f) Install thrust collar lock washer [6541] and lock nut [3712.2] on shaft, tighten nut but do not bend down ear of lock washer.
   g) Install thrust bearing parts:
      g1) Lubricate base rings, leveling plates, and shoes with light oil.
      g2) Set bottom halves of base rings on shaft, and rotate to bottom position.
      g3) Set top halves of base rings on shaft and make certain that ends of leveling plates interlock properly.
      g4) Rotate bottom halves of base rings to top. Insert shoes and rotate back into bottom position. Insert shoes in top halves of base rings.
   h) Set top halves of bearing housings on bottom halves. Install cap screws in flanges and evenly tighten.
3) Install the cartridge assembly tension flange in place of the pump half-coupling on the shaft and secure it with the coupling nut [7411]. Tighten the jack screws in the tension flange against the bearing housing until snug. See section 6.7.3, **Figure 6-5**: Tension Flange Arrangement.
4) Attach a hoist to a lifting strap placed at the cartridge assembly center of gravity and lift the assembly. Transport the cartridge assembly to the alignment tool.
5) Insert the coupling end of the cartridge assembly into the alignment tool. When the nylon strap binds, place wooden blocks under casing cover [1221] to support the assembly. Remove the hoist from the nylon lifting strap and attach it to an eyebolt in the head, and tension the cable to support the weight of the assembly. Continue to push the cartridge assembly into the alignment tool, using a hydraulic ram if necessary.
6) Install the case stud nuts (6572.2) on the studs provided on the alignment tool and tighten. Ensure that a metal-to-metal fit is achieved.
7) Loosen the jack screws on the cartridge assembly tension flange, then remove the coupling lock nut (7411) and the tension flange.
8) Install the suction end cover cap screws [6570.3] and tighten them firmly and evenly.

6.9.3.2 Rotor Radial Alignment

1) Install dial indicator on each end of the shaft [2100] so that one reads bore for outboard seal housing and the other reads bore for the inboard seal housing. Rotate shaft and take readings at

OFFICIAL COPY - 001.39621.000073 - FB001 - 01 - Approved(A) - - - 07-Aug-2013 09:18 AM

bottom, top, and each side. Readings thus obtained must correspond to those given in section 10.3. If necessary, reposition bearing housings as follows:

a) Attach dial indicators to pump casing [1100] to read bearing housing [3200, 3230] position in both directions
b) Loosen bearing housing bolting [6570.2].
c) Use jacking bolts on bearing housings [3200, 3230] to center rotor in seal bore
d) Tighten bearing housing bolting [6570.2]
e) Re-indicate shaft [2100] to ensure it is still centered in seal bores
f) Redowel [6810.5] bearing housings

6.9.3.3 Rotor Axial Alignment

To set the rotor axial running position, proceed as follows:

1) Establish that the rotor has been radially centered and that the sleeve bearings [3020] and bearing housings [3200, 3230] remain in position.

Note: If your pump is equipped with a hydraulic thrust collar, then refer to the COUPLING AND THRUST COLLAR INSTALLATION drawing at the back of this manual for installation procedure. Do not use heat to install a hydraulic thrust collar.

2) Oil and assemble:
   a) Inner retaining plate (if applicable), thrust collar spacer sleeve [2460], thrust collar [3610], and thrust collar key [6700.6] (if installed)
   b) Thrust collar locknut [3712.2] and lock washer [6541].

Note: Install base rings in matched sets. Matching identification appears on both halves.

3) Assemble inner parts of double thrust bearing [3032], as follows:
   a) Lubricate base ring, leveling plates, and shoes with light oil
   b) Set bottom half of base ring on shaft and rotate ring to bottom position
   c) Set top half of base ring on shaft and make certain that ends of leveling plates interlock properly
   d) Rotate bottom half of base ring to top, insert shoes, and rotate back into bottom position; then insert shoes in top half of base ring
4) Check thrust collar [3610] runout.
   a) Set up dial indicator to read on face of thrust collar [3610]. Hold shaft against thrust bearings and rotate shaft [2100]. See section 10.3 for limit. If runout is greater than limit, check for burrs and dirt on parting surfaces of shaft shoulder and thrust collar [3610].
   b) Set up dial indicator to read outside diameter of thrust collar [3610]. See section 10.3 for limit.
5) Disassemble inner parts of thrust bearing.
   a) Remove thrust bearing shoes from top half of base ring, and then lift off top half of base ring.
   b) Rotate bottom half of base ring to expose remaining inner thrust bearing shoes, remove shoes, and lift off bottom half of base ring.
6) Determine total axial movement of shaft [2100] as follows:
   a) Lay strip of masking tape on parting flange of bearing housing [3200, 3230], extending approximately 25 mm (1 in.) beyond each face of the thrust collar [3610].
   b) Push shaft toward coupling end as far as possible.
   c) Hold straight edge against outer face of thrust collar [3610] and pencil position of collar on tape.
   d) Push shaft toward opposite end as far as possible.
   e) Hold straight edge against outer face of thrust collar [3610] and pencil position of collar on tape.
   f) Measure distance between marks. Distance must be equal to or greater than total shaft movement given in section 10.3.
7) Reassemble inner parts of thrust bearing as instructed in step 3 above.
8) Check running position of rotor as follows:
   a) Push shaft toward coupling end until thrust collar butts against faces of thrust bearing shoes.
   b) Hold straight edge against outer face of thrust collar [3610] and pencil position on tape. Measure distance to inboard mark. Distance should equal distance D determined in last phase of rotor lateral movement (Figure 6-8) in vertical assembly section 6.9.1.2.
9) If necessary, change length of thrust collar spacer [2460] to reposition thrust collar [3610] on shaft, as follows:
   a) Disassemble inner parts of thrust bearing.
   b) Remove thrust collar locknut [3712.2], thrust collar [3610], thrust collar key [6700.6] (if installed), and disc spacer [2460].

OFFICIAL COPY - 001.39621.000073 - FB001 - 01 - Approved(A) - - - 07-Aug-2013 09:18 AM

c) Reduce length by machining, or make a new longer thrust collar disc spacer [2460], as required.
d) Reinstall parts.
e) Repeat steps 4 and 8 above.

10) After correct running position is verified, remove:
a) Thrust bearing parts (see step 5 above)
b) Bottom halves of sleeve bearings [3020]
c) Bottom halves of bearing housings [3200, 3230]
d) If the sensor disc [2900] is located inboard of the thrust bearing, remove the sensor disc and key.

6.9.4 Mechanical Seal

6.9.4.1 Installing Seal Housing

Install seal housing as follows:

1) Install new seal plate gasket [4590.1] on seal plate.
2) Verify that case mating surface for seal plate gasket [4590.1] is clean, smooth, and even.
3) Attach lifting equipment to seal and position seal plate in casing cover [1221] or inboard end of casing [1100], whichever is applicable.
4) Secure seal plate with cap screws and detach lifting equipment.
5) Connect piping, if applicable, to seal plate.
6) When pump has seal plate at both ends, repeat steps at opposite end of pump.

6.9.4.2 Installing Seal Unit

Note: To assure that seal parts and shaft are properly aligned after bearings are installed, keep the shaft sleeve and the stuffing box locked together and shaft sleeve loose from shaft until both sleeve bearing and thrust bearings are installed.

With the seal plate in place and the shaft sleeve locked together, lightly lubricate inside of sleeve with a lubricant that is compatible with your pumpage and install the seal unit in accordance with the seal manufacturer's installation and assembly drawing in the back of the manual.

6.9.5 Bearing Assembly

1) Slide deflector [2540] or Inproseal rotors and stators over the shaft with their respective O-rings [4610.1].
2) If the sensor disc [2900] is located inboard of the thrust bearing, install sensor disc.
3) Install brackets, bearing housings [3200, 3230], bolting, and dowels. Ensure that stationary oil baffles and oil seal rings are correctly aligned with the bearing housing.
4) Oil all part surfaces before installing.
5) Raise shaft slightly and roll bottom halves of sleeve bearing [3020] into bearing housings [3200, 3230]. Place upper sleeve bearing halves on top of lower halves. If the sleeve bearings are pressure dam type bearings, ensure that the pressure dam is aligned properly with the rotation of the shaft, as illustrated in **Figure 6-9** below

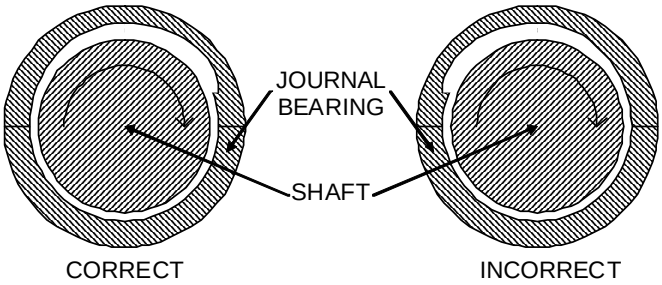

Figure 6- 9 : Pressure Dam Bearing Alignment

Note: If your pump is equipped with a hydraulic thrust collar, then refer to the section 6.9.7 (see drawing at the back of this manual) for installation procedure. Do not use heat to install a hydraulic thrust collar.

6) Install inner retaining plate (if applicable), thrust collar spacer sleeve [2460], and thrust collar key [6700.6] (if installed). Heat thrust collar [3610] to the installation heat specified in section 10.3 and slide onto shaft.
7) Install thrust collar locknut [3712.2] on shaft, tighten locknut but do not bend down ear of lock washer [6541].
8) Install thrust bearing parts:
a) Lubricate base rings, leveling plates, and shoes with light oil
b) Set bottom halves of base rings on shaft, and rotate to bottom position
c) Set top halves of base rings on shaft and make certain that ends of leveling plates interlock properly
d) Rotate bottom halves of base rings to top. Insert shoes and rotate back into bottom position. Insert shoes in top halves of base rings
9) Recheck thrust collar [3610] runout per previous instructions, see rotor axial alignment (section 6.9.3.3), paragraph 4.
10) Verify that thrust collar locknut [3712.2] is tight and then bend lock washer [6541] tab into slot on nut.

OFFICIAL COPY - 001.39621.000073 - FB001 - 01 - Approved(A) - - - 07-Aug-2013 09:18 AM

11) Install sensor disc [2900] (if it is located on the end of the shaft) and outer retaining plate (if applicable).
12) Apply an even film of Loctite Gasket Eliminator 504 (or equivalent) to parting surface of bottom halves of bearing housings. Note cure time on the container.
13) Set top halves of bearing housing on bottom halves. Install cap screws in flanges and evenly tighten.
14) Wipe off any excess gasket sealant.
15) Temporarily install end cover [3266] without sealant. Evenly tighten cap screws [6570.7].
16) Install dial indicator to read on end of shaft.
17) Firmly push shaft in one direction until it stops solidly and set dial indicator to zero.

Note: If in doubt about how to machine the end cover [3266], contact your nearest Flowserve Sales Office (See section 6.2.1).

18) Push shaft in opposite direction until it stops solidly. Read dial indicator. Shaft movement should be within the thrust bearing axial clearance specified under section 10.3. If a minute adjustment is necessary, make certain that bearing, seal units, and internal assembly parts are correctly sized and assembled, then machine either:
    a) End cover [3266] surface that abuts thrust bearing [3032] if low limit is exceeded,
    b) End cover [3266] surface that abuts bearing housing [3230], if high limit is exceeded.

19) If pump is equipped with mechanical seal units, tighten shaft sleeve collars (or nuts) and secure them with set-screws. Unlock shaft sleeve from seal plates, see mechanical seal (section 6.9.4).
20) Position deflector rings [2540] or Inproseal rotors per dimension given in section 10.3.
21) Verify that the rotor turns easily and smoothly by rotating shaft [2100].
22) To secure the cartridge assembly, install the tension flange in place of the pump half-coupling on the shaft and secure it with the coupling nut (7411), see **Figure 6-5**: Typical Tension Flange Arrangement. Some cartridge assembly may use coupling nut [7411] and pump half coupling with the tension flange, then install the tension flange between the pump half coupling and bearing housing.
23) Remove thrust bearing housing end cover (3266). Apply an even film of sealant to parting surface of end cover that abuts bearing housing. Install cover with stationary oil baffle or Inproseal stator (if installed), and evenly tighten cap screws.

6.9.6 Main Lube Oil Pump Installation

These instructions provide for installation of a lubricating oil (lube oil) pump that is flange-mounted to the outboard bearing housing end cover [3266] for direct and axial coupling of its shaft with the pump shaft. If your pump is not equipped with such a lube oil pump, please disregard this section.

6.9.6.1 Installing Half-Couplings (Lube Oil Pump)

To install half-couplings, proceed as follows:
1) Verify that vibration sensor disc [2900] is installed, if applicable (see assembly drawing), also verify that bearing end cover [3266] is not installed (see section 6.9.5).
2) Install half-coupling key in shaft of vibration sensor disc [2900] or in end of pump shaft, whichever is applicable (see assembly drawing), slide half-coupling completely onto key, and fix half-coupling to shaft of disc or end of pump shaft, whichever is applicable, with set screw.
3) Install spider in half-coupling on shaft of vibration sensor disc [2900] or end of pump shaft, whichever is applicable (see assembly drawing).
4) Install half-coupling key in shaft of lube oil pump, slide half-coupling onto key, allowing coupling face to extend past end of lube oil pump shaft. Do not install set screw.
5) Solidly butt together flanges of lube oil pump and bearing end cover [3266]; then withdraw lube oil pump. Measure 1.5 mm (0.06 in.) from hub of half-coupling toward lube oil pump case and mark distance on shaft; then move half-coupling hub to mark and secure it to shaft with set screw. There shall be a total gap of 1.5 mm (0.06 in.) between spider and half-couplings.
6) Remove end cover [3266]. Apply an even film of sealant to parting surface of end cover [3266] that abuts bearing housing [3230]. Install cover with stationary oil baffle or Inproseal stator (if installed), and evenly tighten cap screws.
7) Wipe off any excess sealant.

6.9.6.2 Installing Lube Oil Pump

To install the lube oil pump, proceed as follows:
1) Ensure:
    a) That lube oil pump has been inspected and assembled for operation as given by manufacturer's instructions in section 10
    b) That half-couplings are free of burrs and gouges
    c) That half-couplings are installed and held firmly in place by set-screws (see section 6.9.6.1 above).
2) Install spider in half-coupling on shaft of vibration sensor disc [2900] or end of pump

OFFICIAL COPY - 001.39621.000073 - FB001 - 01 - Approved(A) - - - 07-Aug-2013 09:18 AM

shaft, whichever is applicable (see assembly drawing).

3) Keep half-coupling on lube oil pump shaft aligned with spider so that half-coupling on lube oil pump shaft will mesh with spider and flanges of lube oil pump and bearing end cover [3266] will butt together solidly. Run cap screws through holes in lube oil pump and evenly and tightly screw cap screws into bearing end cover [3266], securing lube oil pump to cover.
4) Insure that conduit for vibration probe wires, key phasor, or pipe plug is installed in largest diameter hole in top of bearing end cover [3266].
5) Connect piping to lube oil pump.
6) Connect drain pipe to outboard bearing end cover [3266].
7) Install drain plug in outboard thrust bearing housing [3230].

6.9.7 Cartridge Assembly Install

To install the cartridge assembly in the pump case [1100], proceed as follows:

1) Remove the cartridge assembly from the alignment tool (**Figure 6-7**) as follows:
   a) Remove either the the suction end plate cap screws [6570.3] or O-ring retainer cap screw [6570.3] which is applicable.
   b) Tighten the jack screws in the tension flange against the bearing housing until snug.
   c) Install an eyebolt in the top of the casing cover [1221] and attach soft cables and a hoist. Tension the cables to support the weight of the head.
   d) Remove the stud, nuts & spacer provided with the alignment tool. Then use pry bars and a winch to pull the cartridge assembly out of the alignment tool. Pull the cartridge assembly out far enough to install a nylon lifting strap around its center of gravity, but do not pull cartridge assembly completely out of the alignment tool.
   e) Place wooden blocks under casing cover [1221] to support the assembly. Remove the hoist from the eyebolt in the casing cover [1221] and attach it to a nylon lifting strap located at the center of gravity of the assembly.
   f) Carefully lift cartridge assembly off of blocks and remove it from the alignment tool.
2) Secure assembly skid (see **Figure 6-6**) or equivalent device to end of baseplate. To avoid subjecting cartridge assembly to binding or twisting stresses or having it roll off of the track, ensure:
   a) Assembly skid is aligned and leveled with bore of casing [1100]
   b) Flange of assembly skid presses solidly against the baseplate.
   c) Feet press against a solid surface across their entire area
   d) Assembly skid is bolted tightly against baseplate making track completely immobile.
3) Lubricate top of track so that cartridge assembly will slide easily.
4) Install a new head gasket [4590.3] and a new suction end plate gasket [4590.4] (if applicable) on the cartridge assembly. Ensure that the gaskets remain in their proper positions while inserting the cartridge assembly into the case [1100].
5) Insert the coupling end of the assembly into the case. Carefully align the cartridge assembly rail [9363] with the casing guide rail key [6700.7]. When the nylon strap binds, place wooden blocks under casing cover [1221] to support the assembly. Remove the hoist from the nylon lifting strap and attach it to an eyebolt in the casing cover [1221], and tension the cable to support the weight of the casing cover. Continue to push the cartridge assembly into the case [1100], using a hydraulic ram if necessary.
6) Install the case stud washers [2905] and case stud nuts [6572.2]. Torque the nuts using the procedure specified in section 10.3 Operating Specifications.
7) Remove assembly skid if installed.
8) Loosen the jack screws on the cartridge assembly tension flange (see **Figure 6-5**), then remove the coupling lock nut [7411] and the tension flange.
9) Install either, the suction end cover cap screws [6570.3] if applicable or O-ring [4610.2], O-ring retainer [2530.1], and O-ring retainer cap screws [6570.3], then tighten them firmly and evenly.
10) Install any interfering piping, wiring, or instrumentation that was removed to permit disassembly.

6.9.8 Coupling Installation

CAUTION The procedures outlined in this subsection do not apply to keyless hydraulic fit couplings. For installation or removal of such couplings, refer to the applicable drawings in the back of this manual.

Ensure that any shipping bolts or packaging material are removed from the coupling prior to operation of the pump. (See coupling drawing in the back of this manual.)

Use of odd size bolts and nuts in the spacer will cause imbalance; use only bolts and nuts specified by the coupling manufacturer. Lubrication of the coupling (see section 10 for manufacturer's

OFFICIAL COPY - 001.39621.000073 - FB001 - 01 - Approved(A) - - - 07-Aug-2013 09:18 AM

instructions) must be accomplished before operation of the pump.

Installation of the coupling halves should be performed by application of an even heat; hammering is apt to distort the coupling or shaft, or otherwise cause damage.

Familiarity with the coupling manufacturer's instructions (see section 10) will facilitate installation. The task of installing a tapered half-coupling on either the driver or the pump shaft consists simply of removing any protective coating from the shaft or the half-coupling, installing the half-coupling key [6700.1], and then drawing the half-coupling into place with the coupling locknut [7411]. The installation of a straight half-coupling is more involved but it can usually be completed by:

1) Removing all protective coating from shaft and half-coupling and making certain that they are clean down to bare metal.
2) Heating hub of hub-and-sleeve half-coupling (or entire unit if it is solid) in oil to temperature specified in section 10.3.

Note: O-rings, where used, must not touch hot metal and should be greased for installation. Make certain that match marks on hub-and-sleeve type couplings will match up when assembled. Some straight half-couplings are secured in position with shaft nuts as well as keys.

3) Installing key [6700.1] on driver or pump shaft and sliding cold sleeve and O-ring followed by heated hub (or heated solid half-coupling, if so equipped) onto shaft until half-coupling is positioned as shown by the outline drawing in the back of this manual.

⚠ CAUTION Lubrication of the coupling (see section 10 for manufacturer's instructions) must be accomplished before operation of the pump for the first time.

4) Verifying that gear type couplings are lubricated.

⚠ CAUTION Use of odd size bolts and nuts to couple half-couplings and spacer will cause imbalance; use only bolts and nuts specified by the coupling manufacturer.

5) Bolting half-couplings and coupling spacer together after all requirements for alignment have been met.

6.9.9 Final Assembly Tasks

If you have not already done so:

1) Remove thrust bearing end cover [3266]. Apply an even film of sealant to parting surface of end cover [3266] that abuts bearing housing [3230]. Install cover with stationary oil baffle or Inproseal stator (if installed), and evenly tighten cap screws.
2) Wipe off any excess sealant.
3) Reinstall all piping, wiring, auxiliary components, or other items removed to allow pump disassembly.
4) If case or driver position has not been disturbed perform hot alignment check of pump and driver Otherwise, perform cold alignment.

OFFICIAL COPY - 001.39621.000073 - FB001 - 01 - Approved(A) - - - 07-Aug-2013 09:18 AM

7 FAULTS; CAUSES AND REMEDIES

Unnecessarily long shutdowns and unnecessary expense may be avoided by careful and periodic observation of the pump (see section 6). That is, by knowing the operational behavior of the pump, which in part stems from frequent observation, an irregular condition is more apt to be detected in its early stage, permitting prompt corrective action before it worsens and causes severe damage. Usually, any behavioral change reveals at least whether its cause is mechanical, electrical or hydraulic, thus narrowing the troubleshooter's task.

Most troubles are related to the hydraulic conditions in the suction system. Here, any condition that causes the suction pressure to drop below that required in the eye of the inlet impeller generates trouble; typically where the net positive suction head (NPSH) is less than required (see section 10).

Bullet point table **Fault; Causes and Remedies** below lists frequently asked fault symptom on the left hand side, with their possible causes and possible remedies on the right hand side. Should questions arise, contact your nearest Flowserve Sales Office.

CAUTION **When venting or draining pumps which contain toxic, flammable, and/or high temperature fluids, ensure that the vented or drained fluid is piped to a safe collector which will prevent release of the fluid into the surrounding area. Failure to do so can result in equipment damage, personnel injury, or death.**

FAULT SYMPTOM

Pump overheats and seizes	Bearings have short life	Pump vibrates or is noisy	Mechanical seal has short life	Mechanical seal leaks excessively	Pump requires excessive power	Pump loses prime after starting	Insufficient pressure developed	Insufficient capacity delivered	Pump does not deliver liquid	PROBABLE CAUSES	POSSIBLE REMEDIES
										A. System troubles	
●									●	Pump not primed.	Check complete filling. Vent and/or prime.
		●				●		●	●	Pump or suction pipe not completely filled with liquid.	
		●				●		●	●	Suction lift too high or level too low.	Check NPSHa>NPSHr, proper submergence, losses at strainers/fittings.
●		●						●	●	Insufficient margin between suction pressure and vapor pressure.	
						●	●	●		Excessive amount of air or gas in liquid.	Check and purge pipes and system.
						●		●	●	Air or vapor pocket in suction line.	Check suction line design for vapor pockets.
						●		●		Air leaks into suction line.	Check suction pipe is airtight.
						●		●		Air leaks into pump through mechanical seal, sleeve joints, casing joint or pipe plugs.	Check and replace faulty parts. CONSULT FLOWSERVE.

OFFICIAL COPY - 001.39621.000073 - FB001 - 01 - Approved(A) - - - 07-Aug-2013 09:18 AM

FAULT SYMPTOM

Pump overheats and seizes	Bearings have short life	Pump vibrates or is noisy	Mechanical seal has short life	Mechanical seal leaks excessively	Pump requires excessive power	Pump loses prime after starting	Insufficient pressure developed	Insufficient capacity delivered	Pump does not deliver liquid	PROBABLE CAUSES	POSSIBLE REMEDIES
		●						●		Foot valve too small.	Investigate replacing the foot valve.
		●						●		Foot valve partially clogged.	Clean foot valve.
		●				●		●	●	Inlet of suction pipe insufficiently submerged.	Check out system design.
							●	●	●	Speed too low.	CONSULT FLOWSERVE.
					●					Speed too high.	CONSULT FLOWSERVE.
							●	●	●	Total head of system higher than differential head of pump.	Check system losses. Remedy or CONSULT FLOWSERVE.
					●					Total head of system lower than pump design head.	
					●					Specific gravity of liquid different from design.	Check and CONSULT FLOWSERVE.
					●		●	●		Viscosity of liquid differs from that for which designed.	
●		●								Operation at very low capacity.	Measure value and check minimum permitted. Remedy or CONSULT FLOWSERVE.
	●	●			●					Operation at high capacity.	Measure value and check maximum permitted. Remedy or CONSULT FLOWSERVE.
										B. Mechanical troubles	
●	●	●	●	●	●					Misalignment due to pipe strain.	Check the flange connections and eliminate strains using elastic couplings or a method permitted.
		●								Improperly designed foundation.	Check setting of baseplate: tighten, adjust, grout base as required.
	●	●	●	●	●					Shaft bent.	Check shaft runouts are within acceptable values. CONSULT FLOWSERVE.
●	●	●			●					Rotating part rubbing on stationary part internally.	Check and CONSULT FLOWSERVE, if necessary.
●	●	●	●	●						Bearings worn	Replace bearings.
					●		●	●		Wearing ring surfaces worn.	Replace worn wear ring/surfaces.

OFFICIAL COPY - 001.39621.000073 - FB001 - 01 - Approved(A) - - - 07-Aug-2013 09:18 AM

FAULT SYMPTOM

Pump overheats and seizes	Bearings have short life	Pump vibrates or is noisy	Mechanical seal has short life	Mechanical seal leaks excessively	Pump requires excessive power	Pump loses prime after starting	Insufficient pressure developed	Insufficient capacity delivered	Pump does not deliver liquid	PROBABLE CAUSES	POSSIBLE REMEDIES
		●				●	●			Impeller damaged or eroded.	Replace or CONSULT FLOWSERVE for improved material selection.
				●						Leakage under sleeve due to joint failure.	Replace joint and check for damage.
			●	●						Shaft sleeve worn or scored or running off center.	Check and renew defective parts.
			●	●	●					Mechanical seal improperly installed.	Check alignment of faces or damaged parts and assembly method used.
			●	●	●					Incorrect type of mechanical seal for operating conditions.	CONSULT FLOWSERVE.
●	●	●	●	●						Shaft running off center because of worn bearings or misalignment.	Check misalignment and correct if necessary. If alignment satisfactory check bearings for excessive wear.
●	●	●	●	●						Impeller out of balance resulting in vibration.	Check and CONSULT FLOWSERVE.
			●	●	●					Abrasive solids in liquid pumped.	
			●	●						Internal misalignment of parts preventing seal ring and seat from mating properly.	
			●	●						Mechanical seal was run dry.	Check mechanical seal condition and source of dry running and repair.
			●	●						Internal misalignment due to improper repairs causing impeller to rub.	Check method of assembly, possible damage or state of cleanliness during assembly. Remedy or CONSULT FLOWSERVE, if necessary.
●	●	●								Excessive thrust caused by a mechanical failure inside the pump.	Check wear condition of impeller, its clearances and liquid passages.
	●	●								Excessive grease in ball bearings.	Check method of regreasing.
	●	●								Lack of lubrication for bearings.	Check hours run since last change of lubricant, the schedule and its basis.

OFFICIAL COPY - 001.39621.000073 - FB001 - 01 - Approved(A) - - - 07-Aug-2013 09:18 AM

FAULT SYMPTOM

Pump overheats and seizes	Bearings have short life	Pump vibrates or is noisy	Mechanical seal has short life	Mechanical seal leaks excessively	Pump requires excessive power	Pump loses prime after starting	Insufficient pressure developed	Insufficient capacity delivered	Pump does not deliver liquid	PROBABLE CAUSES	POSSIBLE REMEDIES
	●	●								Improper installation of bearings (damage during assembly, incorrect assembly, wrong type of bearing etc).	Check method of assembly, possible damage or state of cleanliness during assembly and type of bearing used. Remedy or CONSULT FLOWSERVE, if necessary.
	●	●								Damaged bearings due to contamination.	Check contamination source and replace damaged bearings.
										C. MOTOR ELECTRICAL PROBLEMS	
		●			●		●	●		Wrong direction of rotation.	Reverse 2 phases at motor terminal box.
					●			●		Motor running on 2 phases only.	Check supply and fuses.
	●	●						●		Motor running too slow.	Check motor terminal box connections and voltage.

OFFICIAL COPY - 001.39621.000073 - FB001 - 01 - Approved(A) - - - 07-Aug-2013 09:18 AM

8 PARTS LIST AND DRAWINGS

Outline :
Sectional : (Ref Only: IB_WIK_SK_Cartridge)
Seal Flush Piping:
Cooling Water Piping:
Lube Oil Piping:

9 CERTIFICATION

Certificates, determined from the contract requirements will be provided with this manual. Examples are certificates for CE marking and ATEX marking. If required, copies of other certificates sent separately to the Purchaser should be obtained from Purchaser for retention with the User Instructions. See section 1.9, Noise level, for details of typical noise certification.

10 OTHER RELEVANT DOCUMENTATION AND MANUALS

10.1 Supplementary user instruction manuals

Supplementary instruction determined from the contract requirements for inclusion into User Instructions such as for a driver, instrumentation, controller, sub-driver, seals, sealant system, mounting component etc are included under this section. If further copies of these are required they should be obtained from the purchaser for retention with these User Instructions.

Where any pre-printed set of User Instructions are used, and satisfactory quality can be maintained only by avoiding copying these, they are included at the end of these User

10.2 Change notes

If any changes, agreed with Flowserve, are made to the product after its supply, a record of the details should be maintained with these User Instructions.

OFFICIAL COPY - 001.39621.000073 - FB001 - 01 - Approved(A) - - - 07-Aug-2013 09:18 AM

10.3 Operating specification

Instructions such as within a standard clear polymer software protection envelope.

PUMP SERIAL NUMBER BXXXXX-01
Pump design clearances are listed below. Use these clearances for restoration when clearances have increased approximately 50% as evidenced by a decrease in performance or excessive vibration

Baseplate Installation	**Metric mm, ℃**		**English Inch, ℉**	
Grout space above foundation (minimum)	25.4		1.0	
Leveling Gradient	.03 per 305		.001 per 12	
Centerline misalignment of multiple baseplates	.25		.010	
Shaft Coupling				
Straight Coupling removal/installation heat	177		350	
Maximum TIR in all planes of connectable shafts	.05		.002	
Dimensions	**Min.**	**Max.**	**Min.**	**Max.**
Rotor shroud position (Dimension “X”)	.00		0	
Rotor axial movement (thrust bearings removed) (minimum)	9.53		.375	
Thrust bearing axial clearance	.00	.00	0	0
Deflector ring axial position clearance	1.52		.060	
Impeller wear surface removal, maximum for truing	1.52		.060	
Rotor centering at seal bores, maximum TIR	.03		.001	
Runout, maximum TIR				
Bare shaft in V-blocks	.03		.001	
Rotor	.05		.002	
Wear rings and bushings	.05		.002	
Thrust collar face	.013		.0005	
Thrust collar outer diameter	.140		.0055	
Running Clearances, diametrical	**Min.**	**Max.**	**Min.**	**Max.**
Journal bearing to shaft. see Table 10-1 this section				
Oil baffle. see Table 10-1 this section				
Suction Impeller drive end	.25	.00	.010	.000
Suction Impeller non drive end	.00	.00	0	0
Radial Impeller drive end	.00	.00	0	0
Radial Impeller non drive end	.00	.00	0	0
Pressure reducing sleeve	.00	.00	0	0
Part-to-Shaft fits	**Min.**	**Max.**	**Min.**	**Max.**
Suction Impeller, drive end interference fit	.000	.000	0	0
Radial Impeller, drive end interference fit	.000	.000	0	0
Pressure reducing sleeve interference fit	.000	.000	0	0
Thrust collar interference fit	.000	.000	0	0
Part-to-Part fits	**mm, ℃**		**Inch, ℉**	
Suction spacer, intermediate cover, discharge cover	0	0	0	0
Destaging spacer	.03		0	
‘Cover-to-case gap shall be parallel all around within	.25		.002	
Cover-to-Case Nut torque procedure See procedure in this section 6.5.1				
Pump Foot Hold down Bolt torque procedure See procedure in this section 6.5.2				
Part removal heat, maximum	**℃**		**℉**	
Impeller	316		600	
Pressure Reducing Sleeve	316		600	

OFFICIAL COPY - 001.39621.000073 - FB001 - 01 - Approved(A) - - - 07-Aug-2013 09:18 AM

Destaging Spacer, Impeller Spacer Sleeve	85	185
Thrust Collar	232	450
Suction Spacer, Intermediate Cover, Discharge Spacer	60	140
Part Installation Heat, maximum	**℃**	**℉**
Impeller	177	350
Pressure Reducing Sleeve	177	350
Destaging Spacer, Impeller Spacer Sleeve	71	160
Thrust Collar	149	300
Suction Spacer, Intermediate Cover, Discharge Spacer	60	140
Warm-up temperatures	**℃**	**℉**
Recommended warm-up rate, degrees per hour	10 to 24	50 to 75
Maximum differential between top and bottom case	10	50
Maximum differential between lowest case and stream	82	180
Lube Oil System Requirements		
System Type:	Pressure Feed	
Alarm and Trip Set point Temperatures:	See lube oil system drawings in the back of this manual.	
Lube Oil Specifications:	High grade turbine type mineral oil, viscosity ISO VG 32. Rust, oxidation, and foam inhibited. No free acid, chlorine, or sulfur. No more than a trace of free alkali. Must be compatible with all parts lubricated by the same system.	

Table 10- 1: Clearances for Sleeve Bearing and Oil Baffles

Shaft Diameter		Sleeve Bearing		Oil Baffle	
Over - Including		Min. – Max.		Min. – Max.	
Metric Units (mm)	English Units (inches)	Metric Units (mm)	English Units (inches)	Metric Units (mm)	English Units (inches)
00.00 - 25.40	0.00 - 1.00	.064 - .102	.0025 - .0040	.28 - .33	.011 - .013
25.40 - 38.10	1.00 - 1.50	.076 - .114	.0030 - .0045		
38.10 - 44.45	1.50 - 1.75	.089 - .127	.0035 - .0050		
44.45 - 50.80	1.75 - 2.00	.102 - .140	.0040 - .0055		
50.80 - 76.20	2.00 - 3.00	.102 - .140	.0040 - .0055		
76.20 - 101.60	3.00 - 4.00	.127 - .178	.0050 - .0070	.38 - .46	.015 - .018
101.60 - 127.00	4.00 - 5.00	.152 - .203	.0060 - .0080		
127.00 - 152.40	5.00 - 6.00	.178 - .229	.0070 - .0090	.48 - .56	.019 - .022
152.40 - 177.80	6.00 - 7.00	.203 - .254	.0080 - .0100		
177.80 - 203.20	7.00 - 8.00	.229 - .279	.0090 - .0100	.58 - .66	.023 - .026

OFFICIAL COPY - 001.39621.000073 - FB001 - 01 - Approved(A) - - - 07-Aug-2013 09:18 AM

Your Flowserve factory contact:

Flowserve Corporation
2300 E Vernon Ave
Vernon, CA 90058

Customer Service (24 hours):
+1 800 547 8671
+1 908 859 7372
Sales & Admin Fax:
+1 800 526 3569

Flowserve B.V. Pump Division
Parallelweg 6, 4878 AH
P.O. Box 25, 4870 AA
Etten-Leur, Netherlands

Telephonbe: 31 76 5028200
Fax: 31 76 5028487

Your local Flowserve representative:

To find your local Flowserve representative, please use the Sales Support Locator System found at www.flowserve.com

FLOWSERVE
REGIONAL SALES OFFICES:

USA and Canada
Flowserve Corporation
Pump
5215 North O'Conner Blvd.,
Suite 2300
Irving, TX 75039-5421, USA
Telephone 1 972 443 6500
Fax 1 972 443 6800

Europe, Middle East & Africa
Worthing S.P.A.
Flowserve Corporation
Via Rossini 90/92
20033 Desio (Milan) Italy
Telephone 39 0362 6121
Fax 39 0362 303396

Latin America and Caribbean
Flowserve Corporation
Pump
6840 Wynnwood Lane
Houston, Texas 77008 USA
Telephone 1 713 803 4434
Fax 1 713 803 4497

Asia Pacific
Flowserve Pte Ltd
Pump
200 Pandan Loop, #06-03/04
Pantech 21
Singapore 128388
Telephone 65 775 3003
Fax 65 779 4607

Visit our web site at:
www.flowserve.com

Experience In Motion

OFFICIAL COPY - 001.39621.000073 - FB001 - 01 - Approved(A) - - 07-AUG-2013 08:18 AM

Three phase electric motors used in explosive atmospheres (Low and high voltage)

H and M lines

Installation, Operation and Maintenance Manual

OFFICIAL COPY - 001.39621.000073 - FB001 - 01 - Approved(A) - - - 07-Aug-2013 09:18 AM

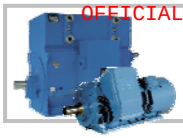

TABLE OF CONTENTS

1. GENERAL INFORMATION 3
1.1. INTRODUCTION 3
1.2. SAFETY INFORMATION 3

2. GENERAL INSTRUCTIONS 4
2.1. MOTOR APPLICATION 4
2.2. TRANSPORTATION 5
2.3. RECEIVING INSPECTION 5
2.4. STORAGE 5

3. INSTALLATION 6
3.1. MECHANICAL 6
3.1.1. FOUNDATION - BASE 6
3.1.2. COUPLING 6
3.1.3. ALIGNMENT 6
3.1.4 COOLING 7
3.1.5 VIBRATION / BALANCE 7
3.2. ELECTRICAL ASPECTS 7
3.2.1 POWER SUPPLY 7
3.2.2.CONNECTIONS 8
3.2.3 ROTATION DIRECTION 9
3.2.4 PROTECTIONS 9
3.2.5 INSULATION RESISTANCE 10
3.2.6 ADJUSTMENT OF MOTOR PROTECTION DEVICES 10
3.2.7 ELECTRIC CONNECTION CHECKING 10

4. MECHANICAL INSTALLATION CHECKING 11

5 NOISE LEVEL 11

6. MAINTENANCE 11
6.1. LUBRICATION 11
6.1.1. QUALITY AND QUANTITY OF GREASE 12
6.1.2. LUBRICATION INTERVALS 12
6.1.3. GREASE LUBRICATED BEARINGS 13
6.1.4. OIL LUBRICATED BEARINGS 13
6.2. MAINTEANCE PLAN 14

7. WARRANTY TERMS FOR ENGINEERING PRODUCTS 17

8. DECLARATION OF CONFORMITY 18

9300.0005 I/9
Material 10174574

REF. 660 - EN
September 2010

OFFICIAL COPY - 001.39621.000073 - FB001 - 01 - Approved(A) - - - 07-Aug-2013 09:18 AM

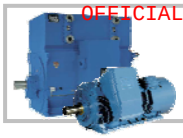

1. GENERAL INFORMATION

1.1. INTRODUCTION

This Manual is intended to supply and clarify important topics that must be followed accordingly including transportation, installation, operation and maintenance of Weg motors used in ***explosive atmospheres***. Therefore, we recommend reading it carefully, together with the Installation and Maintenance Manual for Low and High Voltage Three-phase Induction Motors (generic) and all specific documents (data sheet, dimensional drawing, connection diagrams, curves, etc.) delivered with the motor, before performing any installation service or before operating the electric motor.

Because these Weg motors have been designed for explosive atmospheres, all safety information described in item 1.2 below should be followed carefully.

1.2. SAFETY INFORMATION

When any motor or equipment is used out of the industrial area, it is the enduser´s responsibility to provide all safety and protection information while installing the motor (for example, to avoid that people come close to the motor, and others.

Additional information about installation, operation and maintenance of electric equipment.

DANGER

Warning!

During operation, such equipment has energized or rotating parts that may present high temperature. So open terminal boxes, unprotected couplings, incorrect handling may cause serious accidents to people and/or material damage. The people responsible for installation safety should ascertain that:

- **Only qualified personnel perform installation and operation services on the equipment;**
- **This personnel must carry this Manual along with other documents supplied with the motor, and the works should be performed in accordance with specific standards and documentation for this product;**
- **Unqualified personnel should never perform any work on electric equipment;**
- **If installation and safety instructions are not followed accordingly, warranty may be void.**

QUALIFIED PERSONNEL are those people who based on their education, experience, knowledge of standards and service conditions required are duly authorized to perform any service on the motor. Furthermore, these people should know and how to carry out first aid procedures.

If you still have further doubts about this, especially in reference to specific product information, WEG is willing to provide such information via its network of authorized service agents and/or representatives.

We recommend that all services related to installation plan as well as all transportation activities, storage, assembly, installation, start-up, maintenance and repairs should be carried out only be qualified personnel.

Special attention should be paid to:

- **Technical data referred to allowed applications (assembly conditions, connections, and installation conditions), included in this Manual, Purchase Order documentation, operation instructions, manuals and other documents;**
- **Instructions and specific conditions for installation on site;**
- **The use of proper tools and equipment; for handling and transportation:**
- **That all protection devices of each component are removed before installation.**

Additionally, all individual parts must be storaged in vibration-free rooms so as to avoid damages, knocks without causing injury to people.

For practical reasons, it is not possible to include in this Manual detailed information that covers all constructive variables, nor covering all possible assembly, operation or maintenance alternatives.

For this reason, the present Manual only includes required information that allow qualified and trained personnel to required to carry out the work.

OFFICIAL COPY - 001.39621.000073 - FB001 - 01 - Approved(A) - - - 07-Aug-2013 09:18 AM

In order to allow Weg to provide a prompt service, within technical standards, the motor serial number that is available on the identification nameplate should be supplied.

If this Installation and Maintenance Manual gets lost, WEG may provide an additional sample.
Is still required, WEG is prepared to solve any further doubt you may require. In this case, motor serial number should be also supplied.

Aiming at a satisfactory motor performance, we suggest to make the installation plan, commissioning, start up and maintenance in conjunction with WEG Service p Department people.

To prevent from eventual motor operating problems, we recommend that all maintenance and revision services described in this Installation, Operation and Maintenance Manual be carried out by duly trained personnel. Changes of rated operating characteristics, such as excess demand of energy, increase in temperature, noise level, abnormal smell and tripping of protections are the first signs of any abnormal occurrence. In this case, to avoid material damage or injury to people, maintenance people should be immediately informed about such circumstances.

In case of doubt, switch motor of immediately!

We recommend that all personnel responsible for the application of electric motors in hazardous areas have been duly trained for such purpose.

Safety and start up instructions meet the followind standards:

IEC 60034-1 Electric Rotating Machines
IEC 60079-0 and NBR IEC 60079-0 – General Standard for Explosion Proof Equipment
IEC 60079-1 e NBR IEC 60079-1 – Standard for Ex "d" Protection
IEC 60079-15 e NBR IEC 60079-15 – Standard for Ex "n" Protection
EN 50019 and NBR9883 – Standard for Ex "e" Protection
IEC 60079-2 e NBR IEC 60079-2 – Standard for Ex "p" Protection
IEC60079-17 and NBR IEC60079-17 – Electrical Installation Inspection and Maintenance in Explosive Atmospheres.

WEG states that all information included in this Manual make part of the contract and motor warranty.

2. GENERAL INSTRUCTIONS

2.1. MOTOR APPLICATION

Based on the above mentioned Standards, WEG motors are intended for industrial applications.

It is not allowed to use standard design motor in explosive atmospheres if they have not been specifically certified for such purpose.

This symbol indicates the present paragraph contains important information about explosive atmospheres, which must be strictly followed to avoid damages and risks.

If a customer makes special requirements, he will be then responsible to provide safety measures. If there will be ambient not meeting the following requirements:

1. Temperature: -20ºC up to +40ºC;
2. Altitude: ≥ 1000 masl;
3. Or in environments containing water and dust, motor installation will only be allowed if such motor is specifically designed for such purpose with instructions on its nameplate.

OFFICIAL COPY - 001.39621.000073 - FB001 - 01 - Approved(A) - - - 07-Aug-2013 09:18 AM

During installation, operation and maintenance, the following symbols must be considered:

Safety and warranty warning;

Additional information about Ex "e" motor;

Danger!

2.2. TRANSPORTATION

Weg motors are supplied with a shaft-locking device. Corrosion resistant protection is applied on all machined surfaces as well.

Whenever motor is transported, reuse shaft-locking device.

To avoid accidents and damages to the motor, it should be always lifted with propoer cables and devices.

Motor should only be lifted by the eyebolts. These eyebolts have been designed to hold motor weight only. So avoid lifting additional loads.

Special care should be taken with the motor package so as to avoid any damage to it.

2.3. RECEIVING INSPECTION

When receiving the motor, check if any damage has occurred during transportation. Then remove the shaft locking device and keep it in a safe room once it needs to be uses on future transportation.
If anything has been noticed, notify immediately the carrier, the insurance company and WEG.

Failure in giving notice to the carrier, to the insurance company and to WEG may result in loosing the warranty.

Do not remove the existing protecting grease from the shaft end, nor the stoppers or plugs that closed the terminal box holes, if any. These protection items must be kept in place until the final installation is has been concluded.
After being removed from the package, a complete visual inspection on the motor should be made.
Motors supplied with roller bearings, shaft should be rotated manually a few times for a uniform grease distribution.

The connection box should be kept closed to ensure the protection degree. Check the cleanliness and moisture condition inside the terminal box before energizing the motor.

2.4. STORAGE

When motor is not unpacked immediately after receiving, it should be maintained in places protected from humidity, vapors, sudden heat changes and rodents. To avoid bearing damage, motor should also be storage in places free of vibrations. Any painting damage and grease, these locals should be fixed so as to avoid future rusting.

OFFICIAL COPY - 001.39621.000073 - FB001 - 01 - Approved(A) - - - 07-Aug-2013 09:18 AM

3. INSTALLATION

3.1. MECHANICAL

3.1.1. FOUNDATION - BASE

Motor feet be uniformly level on a metallic base to avoid frame bending. Shims up to 2mm may be used to adjust the leveling.

WEG will not be responsible for the design and foundation of the base.

3.1.2. COUPLING

For cost, saving of space and to avoid belt slippage along with accident prevention, direct coupling is preferred. Also in cases gear boxes are applied, preference should be given to direct coupling. When pulleys are used, we recommend to heat it up to 80ºC and have it mounted at hot using suitable tools.
To avoid bearing and shaft end damage, mounting and dismounting of pulleys must be made with suitable tools.

While mounting and dismounting a pulley, never make pressure or knocks on the bearings.

Always use flexible couplings; rigid couplings require special bearing arrangement as well as axial and radial alignment of the shafts.

Excess belt tension may cause bearing damage and lead to shaft rupture.

In cases of belt coupling, belts can not be affected electro statically.

The couplings used must be suitable to withstand radial and axial vibrations during operation. Special care must be taken to avoid that the allowable load and speed limits given be the catalogs are not exceeded.

WEG motors are factories balanced with half key. This means that couplings, pulleys, tooth wheels, etc must also be balanced with half key.

3.1.3. ALIGNMENT

Especially in cases of direct couplings, motor shaft must be aligned axially and radially with the driven machine shaft.

Incorrect alignment can lead to bearing damage, vibrations or even cause shaft rupture.

Correct alignment can be ensured with thew use of dial gauges, as shown in figures 3.3.1, 3.3.2 and 3.3.3.

If considering a complete shaft turn, misalignment should not exceed 0.03 mm.

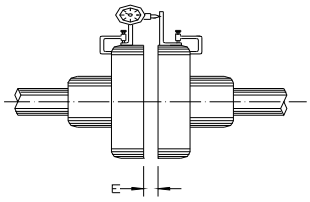

Fig. 3.3.1 - Axial reading (parallelism).

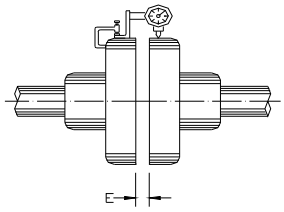

Fig. 3.3.2 – Radial reading (concentricity).

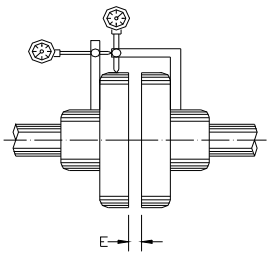

Fig. 3.3.3 – Axial and radial reading combined.

The axial alignment (dimension "E") between the half couplings should be performed in accordance with manufacturer's recommendations.
When making the alignment/leveling, influence of temperature on the motor and driven machine should be taken into consideration.

OFFICIAL COPY - 001.39621.000073 - FB001 - 01 - Approved(A) - - - 07-Aug-2013 09:18 AM

Expansion effect of the components may change the alignment/leveling conditions during operation.

If required, WEG can offer its personnel duly trained, as well as a laser equipment to make the alignment/leveling of the motor and driven machine.

3.1.4 COOLING

During installation, all cooling conditions should be considered. The recommended installation distance between air inlet into the motor and the wall should be at least ¼ of the air inlet diameter. A person should also be able to pas in and out to carry out cleaning services on the air inlet screen.
Machines that are cooled with ambient air, air inlet screens must be cleaned at regular intervals so as to ensure free passage of air. The warm air can not be sucked again by the motor.

- Vertically mounted motors with air inlet on top, the air opening must be protected by a proper cover so as to avoid dropping of foreign materials vertically into the motors.
- For independent cooling machines, tubes and fans must be designed based on air flow required by the machine.
- Protection systems for continuous monitoring of pressure and tube air flow must be provided.
- In case of machines with internal cooling having Degree of Protection IP, tubes, fans and filters should be suitably designed and produced, and correctly mounted.
- All protections provided for transportation and storage of the machine should be removed right before the installation.
- Considering that direct sun heat causes increase in temperature, externally installed motors should be always protected against weathering.

3.1.5 VIBRATION / BALANCE

- All WEG motors are dynamically balanced with half key;
- They are balanced in conformity with applied standards meeting the balance degree required by the specification;
- The vibration with the machine coupled should be higher than the values given by table 3.5.1 below;
- Alarm and tripping levels must be adjusted as indicated in table 3.5.1 ensuring that the machine are always switched-off when reaching the preset figure;

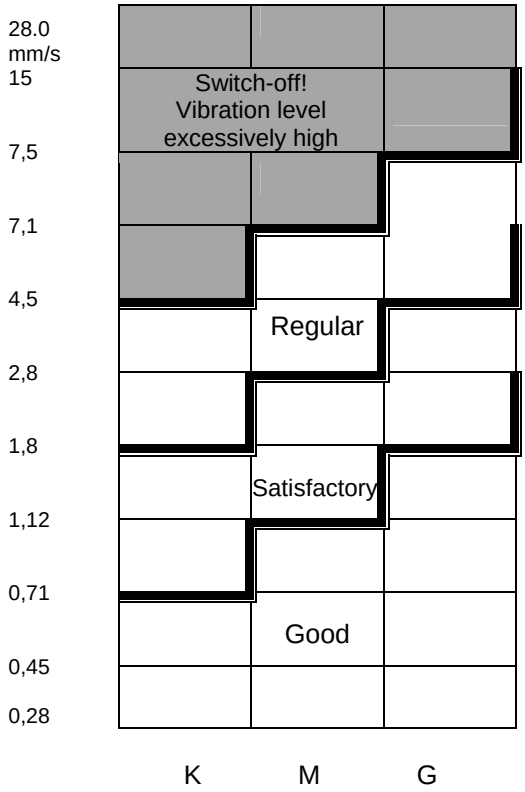

Table 3.5.1.

K – Low output motors < 15kW.
M – Medium output motors > 15kW to < 500kW.
G – Large output motors > 500kW.

3.2. ELECTRICAL ASPECTS

3.2.1 POWER SUPPLY

Make sure the motor is connected to the correct power supply.
The cable gauges and the protection devices must be designed based on the motor rated current.

The Weg motors are designed according to IEC 60034-1, NBR 7094 and designed for a rated voltage +- 10%.
For rated frequency, a variation of 95% to 103% (Range "B") is allowed.

Ex "e" are designed for a rated voltage of +- 5% and for a frequency variation of 2% (Range "A").

OFFICIAL COPY - 001.39621.000073 - FB001 - 01 - Approved(A) - - - 07-Aug-2013 09:18 AM

The curves of Figure 4.1.1 and Figure 4.1.2 below show the effect of voltage and frequency variation on the motor performance characteristics.

Percent variation of the motor characteristics

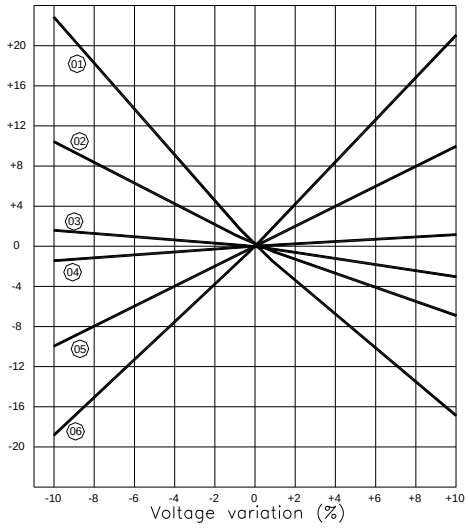

Fig. 4.1.1. - Percent variation of the voltage.

Caption of Fig. 4.1.1:
1 – Slip
2 – Rated current
3 – Power factor
4 – Efficiency
5 – Starting current
6 – Starting and breakdown torque

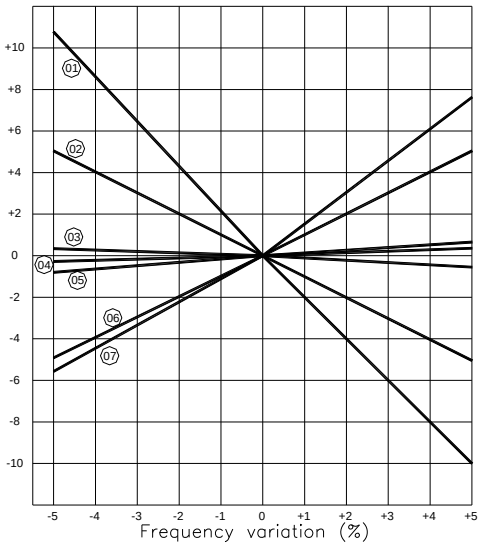

Fig. 4.1.2.- Percent variation of the frequency.

Caption of Fig. 4.1.2:
1 – Starting torque
2 – Starting current
3 – Rated current
4 – Efficiency
5 – Speed
6 – Friction and fan losses

The effects given herewith are not applied generally, hence they are not valid to all motors!

3.2.2.CONNECTIONS

Open the terminal box and check pertinent details, if required. Check if the rated voltage is the same as that given on the motor nameplate. Specify connection cables to meet motor rated current taking into consideration environment factors (such as ambient temperature, installation type, etc).

Low voltage three-pole cables isolated with PVC ≤ 1kV		
Current	No. of leads	Cable gauge
> 600...≤ 800A	2	300 mm^2
> 400...≤ 600A	2	185 mm^2
> 300...≤ 400A	1	300 mm^2
> 200...≤ 300A	1	185 mm^2
≤ 200 A	1	95 mm^2

Medium voltage three-pole cables isolated with PVC > 1,0...≤ 11kV		
Current	No. of leads	Cable gauge
> 200...≤ 315A	1	240 mm^2
> 100...≤ 200A	1	120 mm^2
≤ 100A	1	35 mm^2

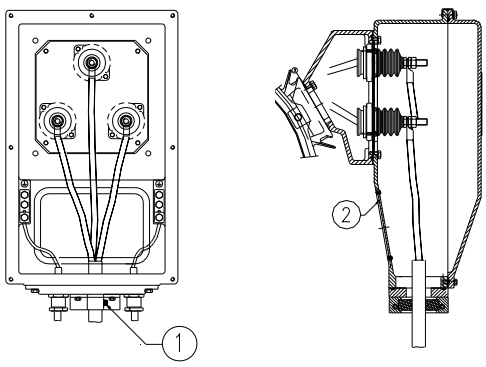

1. The screws should be pressed with torque of 35Nm.

OFFICIAL COPY - 001.39621.000073 - FB001 - 01 - Approved(A) - - - 07-Aug-2013 09:18 AM

2. The window of pressure relief should not be damaged during the assembly and maintenance.

After the conclusion of these works must be made a visual inspection e, if necessary, be made the repair of these points with original seals.

NOTE:
The gauge of the feeding cables must be in accordance with the motor documentation.

			Press Torque Nm
Pin	thread d	M 12	15,5
		M 16	30

NOTE:
If two parallel handles will be connected, the connection in the pins must be made according to the drawing below:

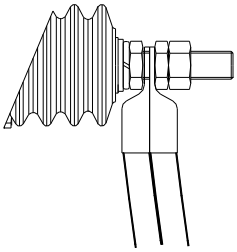

3.2.3 ROTATION DIRECTION

If the power supply cables are connected in the phase sequence L1, L2, L3 with U1, V1, W1 or T1, T2 and T3, motor will turn clockwise. If two connections are reversed, that is, if the power supply with the same sequence of phase L1, L2, L3 is connected with V1, U1, W1 (or U1, W1, V1, or W1, V1, U1), the motor will turn counter clockwise.
The cable metallic protections (equipotential protection) must be connected to the grounding which is provided for such purpose inside the terminal box.

Motors designed for explosive atmospheres must be fitted with suitable terminals and pressure washers. Pay attention to minimum insulation distance between cables when making the connection.
Before closing the terminal box, make sure all terminal nuts and grounding connections are duly fastened. Also make sure that all lead outlets sealing that are certified are in perfect conditions and installed correctly.
Any opening not in use must be closed with certified plugs.

3.2.4 PROTECTIONS

The motors are supplied with temperature detectors PT100 in Protection Ex "e" and/or Ex "i" for just measurement of the temperature, or either, to monitor the temperature in overload case, sub-voltage or fan fail, etc. The references of the respective certificates must be considered.

NOTE: When the motor will be equipped with temperature detector (PT 100) for Intrinsic Security (Ex "i"), the measurement system connected to this sensor will have to respect the described conditions below, and the measurement equipment should be certified for the same protection.

Electric values
Operation Voltage Ui ≤ 60V
Measured Current 0,8 mA ... 2 mA
Output max. ≤ 1,5 W
(in case of fail)

The connectors for Intrinsic Security (Ex "I") can be recognized for the color that in this in case is blue.

The cables are taken from the motor terminal box to a temperature detector which must be installed in control panel.

When requested by the customer for special application conditions, motor can also be supplied with several thermo sensors for winding and bearing protections and others.
The temperature of the PT100 calibrated resistance may be calculated with the formula given below:

$$T = \frac{R - 100}{0{,}385}$$

R = Resistance measured in the PT100.
T = Temperature in ºC.

We recommend to adjust the relays at the following temperature range:

Component	Thermal class	Alarm	Tripping
Winding	F	140ºC	155ºC
	H	155ºC	180ºC
Bearing	-	110ºC	120ºC

Temperature values for alarm and tripping.

Alarm and tripping values can be defined based on the application, however, that can not exceed the above figures.

OFFICIAL COPY - 001.39621.000073 - FB001 - 01 - Approved(A) - - - 07-Aug-2013 09:18 AM

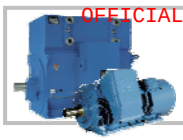

For hazardous area motors, the maximum tripping time for the protection device an not be, in case of overload or locked rotor, exceed the time limit given by the certification of the prototype-EG as well as the time to indicated on the motor nameplate.

Heavy starts: Motors that are submitted to acceleration time conditions > 1.7 x time to must be protected with over current protection devices based on the Certificate of Conformity.

3.2.5 INSULATION RESISTANCE

When a motor is not immediately installed, it should be then protected against moisture, heat, dirt so as to avoid deterioration of the insulation. Winding insulation resistance should be measured before operating the motor for the first time, or if motor is kept in stock for long periods of time, or long switching-off periods of time. If motor is storaged in rooms with moisture, insulation resistance must be measured at periodical intervals.
Minimum resistance value should be above 25MM. Table 4.4.1 provides insulation resistance values measured under operation. Table 4.4.2 gives information about polarization index.

Insulation Resistance	
Insulation Resistance Values	**Valuation**
< 2MΩ	Unsatisfactory
25 ...100MΩ	Regular
100...500MΩ	Satisfactory
500...1000MΩ	Good
> 1000MΩ	Excellent

Table 4.4.1

Polarization Index (1 until 10 min.)	
Polarization Index	**Valuation**
< 1.5	Unsatisfactory
1.5 until 2.0	Regular
> 2.0	Satisfactory

Table 4.4.2

Disconnect motor from power supply before making any insulation measurement.

To avoid electric discharge risks, discharge the terminals right after performing the measurement.

3.2.6 ADJUSTMENT OF MOTOR PROTECTION DEVICES

Motor protection devices for explosive atmospheres must be always switched-on, and the adjustments should be done in accordance with Standard EM 60079-14, DIN VDE0165 and NBR 5410. If there is no other indication, motors are then designed for S1 service duty (continuous).

If required by the application, other protection devices than those given above may be installed.

All protections, including the overcurrent ones, must be adjusted based on the rated motor conditions. This protection must also protect the motor in case of short-circuit (that is, in case of locked rotor).

Winding with Delta connection must be protected against single phase. To do that, connect the relay in series with the winding phases and adjust at 0.58 times the rated current.

All winding and bearing protections must be always switched-on and correctly adjusted.

3.2.7 ELECTRIC CONNECTION CHECKING

- Check periodically if all connections and terminals inside the terminal box are firmly made;
- Check if leads passage in the terminal box, cable gland and terminal box sealing;
- Remove all dust and dirt from terminal box, if any.

Any service on electric machines should only be carried out when it is completely stop and all phases disconnected from the power supply.

OFFICIAL COPY - 001.39621.000073 - FB001 - 01 - Approved(A) - - - 07-Aug-2013 09:18 AM

4. MECHANICAL INSTALLATION CHECKING

- Check if all motor fixing bolts are duly fastened;
- Check coupling eccentricity, measure axial and radial clearance and compare such figures with maximum specified values;
- Measure machine vibration levels periodically and compare results with figures given by Table 3.5.1.

If motor will remain in stock for long periods of time without having the space heater switched-on, water inside the motor may become condensed.

Condensed water may be drained by removing the threaded drain plugs placed on the drain holes. However, after drainage, these threaded drain plugs must be refitted and glued with Loctite 221.

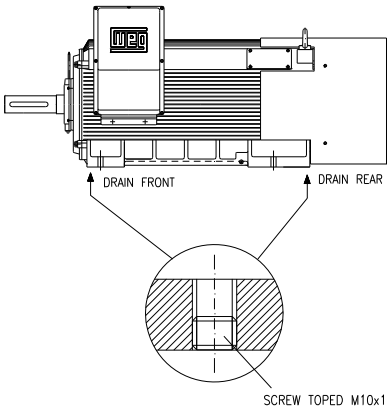

The drain hole must be kept closed during the operation.

5 NOISE LEVEL
(Acoustical properties)

To ensure a low noise level operation, the source of noise must be identified and how such noise is transmitted through the ambient. The following motor components may generate noises within na audible range:

1. Cooling system.
2. Bearings.
3. Magnetic circuit.

The noise level of an electric motor, however, depends mainly on its size, cooling system, speed and degree of mechanical protection (enclosure). Cooling system is airborne and usually affects only the noise level in the area where motor is installed. This noise level may be reduced by using mufflers. Noises caused by bearings or in the magnetic circuit are originated from mechanical vibrations of individual parts or the motor set, and they are transmitted through the foundation, walls, cooling pipes of the machine. This type of noise can be reduced by installing the motor on suitable designed anti-vibration dampers. It is important to note that incorrect dampers may even increase vibrations.

6. MAINTENANCE

6.1. LUBRICATION

Depending on the application, load, speed, temperature conditions and size, Weg motors may be supplied with antifriction bearings lubricated by grease or oil or sleeve bearings.
Operational safety of these motors will depend on the compliance of the lubrication intervals.

For correct lubrication, always use the type of lubricant indicated on the motor nameplate.

For grease lubricated bearings, we recommend to use greases with the following characteristics:

GREASES FOR MOTOR BEARINGS			
Fabricant	Grease	Temperature range (ºC)	Application.
Esso	Polyrex EM103 Unirex N2	-30 up to +170 -35 up to +175	Normal
Shell	Alvânia R3 Aeroshell 7	-35 up to +130 -55 up to +100	Normal Low temp.
Kluber	Staburags N12MF*	-20 up to +140	Normal
Petrobrás	Lubrax GMA2	0 up to +130	Normal
Esso	Beacon 325	-50 up to +120	Low temp.

Never mix greases with different base components.
Example: A Lithium based grease must not be mixed with a calcium or sodium based grease.

OFFICIAL COPY - 001.39621.000073 - FB001 - 01 - Approved(A) - - - 07-Aug-2013 09:18 AM

As a rule, motors should be greased with the motor in operation. Otherwise, the grease, instead of going through the bearing area, will penetrate into the motor.

NOTE: Before performing the lubrication, carefully clean the grease fittings and surrounding areas.

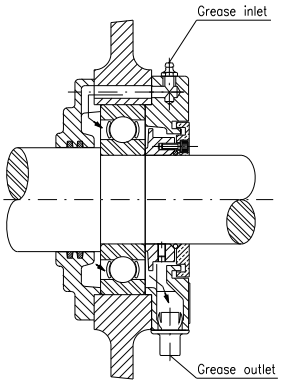

Fig. 6.1.1 - Grease flow into the bearing housing.

Storage old grease correctly.

LUBRICATION PROCEDURES

1. Remove the grease relief cover, if any;
2. Clean the area around the grease fitting using a clean cotton fabric;
3. With the motor running, add amount of grease indicated on the motor nameplate;
4. Leave the motor running for 1 to 2 hours to allow drain of the excess of grease. Replace the grease relief fitting, if any;
5. During lubrication, increase in bearing temperature may be noticed. However, after one hour of operation, motor should achieve normal operating temperature. See Figure above.

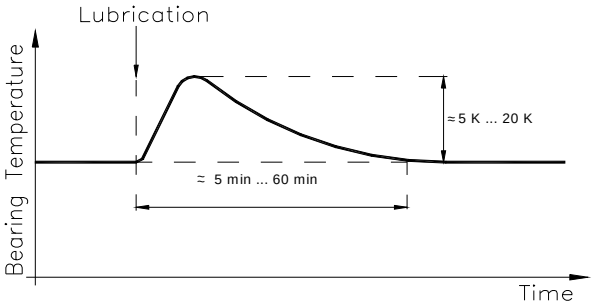

Fig 6.1.2.

6.1.1. QUALITY AND QUANTITY OF GREASE

The relubrication can only be made with compatible grease and in the amount indicated on the motor nameplate as lacking of grease or excessive grease affect the bearings.
Excessive greasing causes overheating due to high resistance causes by rotating parts resulting in damage to grease properties.
Additionally, excess of grease may cause leakage with the grease penetrating into the motor winding.
Lithium and bisulfate of molybdenum based grease are commonly used as they are of good mechanical stability, are insoluble in water and have melting point of approximately 200ºC.

Use only the type of grease indicated on the motor nameplate.

6.1.2. LUBRICATION INTERVALS

Lubrication intervals and amount of grease given in the tables below should only be taken as tentative information.
For relubrication, follow the intervals and grease amounts indicated on the identification nameplate.

OFFICIAL COPY - 001.39621.000073 - FB001 - 01 - Approved(A) - - - 07-Aug-2013 09:18 AM

Lubrication intervals for horizontally mounted motors (60hz) – based on operating hours

ROLLER BEARING			
Bearing	Poles	Operating Hours (h)	Quantity of grease (g)
NU222 NU322	8	6400	40
	6	4500	
	4	2000	60
NU224	8	6800	45
	6	4900	
	4	2200	
NU226 NU326	8	6200	50 85
	6	4300	
	4	1800	
NU228 NU328	8	5500	55 95
	6	3700	
	4	1400	
NU230	10	6300	65
	8	4900	
	6	3100	
NU232	12	6700	70
	10	5700	
	8	4400	
NU234	10	5200	85
	8	3900	
	6	2300	

Relubrication intervals for horizontal mounted motors (60hz) – based on operating hours

LOCKED BALL BEARING			
Bearing	Poles	Operating hours (h)	Quantity of grease (g)
6314	2	3400	30
6316	6	10000	35
	4	8900	
6320	8	10000	50
	6	10000	
	4	6400	
6322	8	10000	60
	6	8700	
	4	4800	
6224	8	10000	45
	6	10000	
	4	5800	
6226	8	10000	50
	6	9300	
	4	5100	
6230	8	3400	65
	6	3400	
	4	3400	
6234	8	8400	85
	6	5600	
	4	2500	

- Normal relubrication interval for ambient temperature of 40ºC and types of grease specified above;
- For vertically mounted motors, reduce relubrication intervals by half;
- Bearing operating temperature = 70ºC;
- Apply correction factors given below for relubrication intervals of table above on the following cases:
  - Operating temperature below 60ºC: 1.59.
  - Operating temperature of 70ºC to 80ºC: 0.63.
  - Operating temperature of 80ºC to 90ºC: 0.40.
  - Operating temperature of 90ºC to 100ºC: 0.25
  - Operating temperature of 100ºC to 110ºC: 0.16.

6.1.3. GREASE LUBRICATED BEARINGS

In general, greases with the same soap type are compatible, but depending of the mixing proportion, may be incompatible. Therefore is not recommended the mixing of different types of grease, without first consulting the grease supplier and/or WEG.

6.1.4. OIL LUBRICATED BEARINGS

For motors with oil-lubricated antifriction or sleeve bearings, the oil level must be checked periodically. Bearing frame must be kept clean to ensure an improve heat dissipation. We recommend to replace the oil every 8000 operating hours, or every time oil properties present any change.
Oil viscosity and Ph should be checked at regular intervals.

Oil level should be check daily, which must be at sight glass center.

The oil to be used must have the following characteristics:
Mineral oil
Flame point > 200ºC
Critical flow rate = - 20ºC
Viscosity's
ISO VG-32
ISO VG-46
ISSO VG-68

As the oil viscosity changes with the temperature, oil supplier information should be considered when selecting it.

Oils with different viscosities should not be used without contacting WEG

OFFICIAL COPY - 001.39621.000073 - FB001 - 01 - Approved(A) - - - 07-Aug-2013 09:18 AM

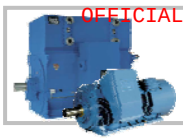

6.2. MAINTEANCE PLAN

- Damaged parts (with cracks, damaged machined parts and defective threads) must be replaced. It is recommended not to repair such parts.
- All services described herewith should be carried out by skilled and experienced people so as to avoid damage to the equipment.. In case of doubt, contact WEG.

For motors to be used in explosive atmospheres, we do not recommend to repair damaged or worn parts. For a safe repair, we recommend to buy original new parts from the factory. So the following plan is recommended:

DAILY	
- Completely motor.	- Check the noise.
- Bearings.	- Check noise and vibration.

WEEKLY	
- Bearings.	- Regrease: follow regreasing intervals based on lubrication instructions.
- Coupling.	- After a week: check alignment and fixation and eventually refasten.
- Monitoring devices.	- Record measured figures.
- Filter.	- Clean, if required.

ANNUALLY (Complete revision)	
- Complete motor	- Refasten bolts
- Stator and rotor winding	- Visual inspection; Measure insulation resistance.
- Terminal box, grounding	- Clean inside of terminal box; - Refasten bolts.
- Coupling	- Check alignment and refasten bolts
- Filter	- Clean (when required)

OFFICIAL COPY - 001.39621.000073 - FB001 - 01 - Approved(A) - - - 07-Aug-2013 09:18 AM

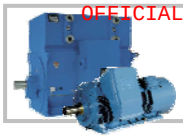

EVERY 2 YEARS (Inspection for Ex"n" motors, according to the standard NBR IEC60079-17) Grade of inspection D = Detailed, C = Close, V = Visual				
	Check that:	Grade of inspection		
		D	A	V
A	**EQUIPMENT**			
1	Equipment is appropriate to the EPL/Zone requirements of the location	x	x	x
2	Equipment group is correct	x	x	
3	Equipment temperature class is correct	x	x	
4	Equipment circuit identification is correct	x		
5	Equipment circuit identification is available	x	x	x
6	Enclosure, glass parts and glass-to-metal sealing gaskets and/or compounds are satisfactory	x	x	x
7	There are no unauthorized modifications	x		
8	There are no visible unauthorized modifications		x	x
9	Bolts, cable entry devices (direct and indirect) and blanking elements are of the correct type and are complete and tight			
	- Physical check	x	x	
	- Visual check			x
10	Flange faces are clean and undamaged and gaskets, if any, are satisfactory			
11	Flange gap dimensions are within maximal values permitted			
12	Electrical connections are tight	x		
13	Condition of enclosure gaskets is satisfactory	x		
14	Enclosed-break and hermetically sealed devices are undamaged	x		
15	Restricted breathing enclosure is satisfactory	x		
16	Motor fans have sufficient clearance to enclosure and/or covers	x		
17	Breathing and draining devices are satisfactory	x	x	
B	**INSTALLATION**			
1	Type of cable is appropriate	x		
2	There is no obvious damage to cables	x	x	x
3	Sealing of trunking, ducts, pipes and/or conduits is satisfactory	x	x	x
4	Stopping boxes and cable boxes are correctly filled			
5	Integrity of conduit system and interface with mixed system is maintained	x		
6	Earthing connections including any supplementary earthing bonding connections are satisfactory (for example connections are tight and conductors are of sufficient cross-section)			
	- Physical check	x		
	- Visual check		x	x
7	Fault loop impedance (TN systems) or earthing resistance (IT systems) is satisfactory	x		
8	Insulation resistance is satisfactory	x		
9	Automatic electrical protective devices operate within permitted limits	x		
10	Automatic electrical protective devices are set correctly (auto-reset not possible)	x		
11	Specific conditions of use (if applicable) are complied with	x		
12	Cables not in use are correctly terminated	x		
13	Obstructions adjacent to flameproof flanged joints are in accordance with IEC 60079-14			
14	Variable voltage/frequency installation in accordance with documentation	x	x	
C	**ENVIROMENT**			
1	Equipment is adequately protected against corrosion, weather, vibration and other adverse factors	x	x	x
2	No undue accumulation of dust and dirt	x	x	x
3	Electrical insulation is clean and dry	x		
Note: Items B7 and B8 account should be taken of the possibility of an explosive atmosphere in the vicinity of the equipment when using electrical test equipment				

OFFICIAL COPY - 001.39621.000073 - FB001 - 01 - Approved(A) - - - 07-Aug-2013 09:18 AM

EVERY 3 YEARS (Complete revision)	
- Complete motor.	- Take motor apart; - Check spare parts.
- Stator and rotor winding.	- Clean it; - Check winding and wedges winding; - Measure insulation resistance.
- Bearings.	- Clean bearings; - Replace, if require; - Check half coupling and replace it, if required; - Check shaft seat and repair it, if required.
- Terminal box; grounding.	- Clean inside and refasten bolts.
- Coupling.	- Check alignment and refasten bolts.
- Monitoring devices.	- Take apart, if possible and test its operation capacity.
- Filter.	- Clean it.
- Air-air heat exchanger.	- Clean heat exchanger tubes.

Detailed Inspection:
Inspection which encompasses those aspects covered by a close inspection and, in addition identifies those defects, such as loose terminations, which will only be apparent by opening the enclosure, and/or using, tools and test equipments.

Close Inspection:
Inspection which encompasses those aspects covered by a visual inspection and, in addition, identifies those defects, such as loose bolts, which will be apparent only by the use of access equipment, for example steps, (where necessary), and tools.

Visual Inspection:
Inspection which identifies, without the use of access equipment or tools, those defects, such as missing bolts, which will be apparent to the eye.

OFFICIAL COPY - 001.39621.000073 - FB001 - 01 - Approved(A) - - - 07-Aug-2013 09:18 AM

7. WARRANTY TERMS FOR ENGINEERING PRODUCTS

These products, when operated under the conditions stipulated by WEG in the operating manual for such product, are warranted against defects in workmanship and materials for twelve (12) months from start-up date or eighteen (18) months from manufacturer shipment date, whichever occurs first.
However, this warranty does not apply to any product which has been subject to misuse, misapplication, neglect (including without limitation, inadequate maintenance, accident, improper installation, modification, adjustment, repair or any other cases originated from inadequate applications).
The company will neither be responsible for any expenses incurred in installation, removal from service, consequential expenses such as finantial losses nor transportation costs as well as tickets and accomodation expenses of a technician when this is requested by the customer.
The repair and/or replacement of parts or components, when effected by WEG within the Warranty period do not give Warranty extension, unless otherwise expressed in writing by Weg.
This constitutes WEG's only warranty in connection with this sale and is in lieu of all other warranties, expressed or implied, written or oral.
There are no implied warranties of merchantability or fitness for a particular purpose that apply to this sale.
No employee, agent, dealer, repair shop or other person is authorized to give any warranties on behalf of WEG nor to assume for WEG any other liability in connection with any of its products.
In case this happens without Weg's authorization, Warranty is automatically cancelled.

LIABILITY

Except as specified in the foregoing paragraph entitled "Warranty Terms for Engineering Products", the company shall have no obligation or liability whatsoever to the purchaser, including, without limitation, any claims for consequential damages or labor costs, by reason of any breach of the express warranty described therein.
The purchaser further hereby agrees to indemnify and hold the company harmless from any causes of action (other than cost of replacing or repairing the defective product as specified in the foregoing paragraph entitled "Warranty Terms for Engineering Products", arising directly or indirectly from the acts, omissions or negligence of the purchaser in connection with or arising out of the testing, use, operation, replacement or repair of any product described in this quotation and sold or furnished by the company to the purchaser.

WEG Equipamentos Elétricos S.A.
Jaraguá do Sul - SC
Fone (47) 3276-4000 - Fax (47) 3276-4030
São Bernardo do Campo - SP
Fone (11) 2191-6800 - Fax (11) 2191-6849
energia@weg.net
www.weg.net

OFFICIAL COPY - 001.39621.000073 - FB001 - 01 - Approved(A) - - - 07-Aug-2013 09:18 AM

8. DECLARATION OF CONFORMITY

EC Declaration of Conformity

WEG Equipamentos Elétricos S/A
Av. Prefeito Waldemar Grubba, 3000
89256-900 - Jaraguá do Sul – SC – Brazil,

and its authorised representative established in the European Community,
WEGeuro – Industria Electrica SA
Rua Eng Frederico Ulrich, Apartado 6074
4476-908 – Maia – Porto – Portugal

hereby declare that the products:

WEG three-phase asynchronous motors and components for these motors

with types of protection "n", Pressurized Enclosure "p", Increased Safety "e" as well as dust protection by enclosure "tD"

H and M line

when installed, maintained and used in applications for which they were designed, and in compliance with the relevant installation standards and manufacturer's instructions, comply with the requirements of the following European Directives and applicable standards:

Directives:

ATEX Directive 94/9/EC

Machinery Directive 2006/42/EC*

EMC Directive 2004/108/EC, regarding the intrinsic characteristics to emission and immunity levels of electromagnetic compatibility

Standards:

EN 60079-0, EN 60079-2, EN 60079-7, EN 60079-15, EN 60079-31, EN 61241-0, EN 61241-1, EN 60204-1 and EN 60204-11

* from 29/12/2009 on, low voltage electric motors are no longer considered under the scope of the current Machinery Directive 2006/42/EC and electric motors designed for use with a voltage rating higher than 1000 V are considered partly completed machinery and are supplied with a Declaration of Incorporation:

The products above cannot be put into service until the machinery into which they have been incorporated has been declared in conformity with the Machinery Directive.

A Technical Documentation for the products above is compiled in accordance with part B of annex VII of Machinery Directive 2006/42/EC and will be available through WEG authorised representative established in the European Community, in response to a reasoned request by the national authorities.

CE marking in: **1998**

Sinésio Tenfen
Managing Director

Jaraguá do Sul, January 22nd, 2010

OFFICIAL COPY - 001.39621.000073 - FB001 - 01 - Approved(A) - - - 07-Aug-2013 09:18 AM

EC Declaration of Conformity

A list of the EC-Type Examination Certificates covered by this Declaration of Conformity is showed below:

Model	Marking	Certificate Nº	NB/Nº
Increased Safety "e"			
Frame sizes HGF 355	II 2G Ex e II T1/T2/T3/T4 II 2G Ex e ib IIC T1/T2/T3/T4	PTB 01 ATEX 3305	PTB/0102
Frame sizes HGF 400	II 2G Ex e II T1/T2/T3/T4 II 2G Ex e ib IIC T1/T2/T3/T4	PTB 02 ATEX 3143	PTB/0102
Frame sizes HGF 315	II 2G Ex e II T1/T2/T3/T4 II 2G Ex e ib IIC T1/T2/T3/T4	PTB 03 ATEX 3067	PTB/0102
Type of protection "n"			
Frame sizes 315-630	II 3G Ex nA II T4/T3	Baseefa 06 ATEX 0349X*	Baseefa/1180
Frame sizes 280-1000	II 3G Ex nA II T4/T3	Baseefa 06 ATEX 0348X*	Baseefa/1180

* Voluntary Certification for Category 3 electrical equipment

Address of the Notified Bodies (NB):
1. PTB: Bundesallee 100 - D-38116 - Braunschweig - Germany
2. Baseefa: Rockhead Business Park, Staden Lane, Buxton, Derbyshire SK17 9RZ – United Kingdom

Jaraguá do Sul, January 22nd, 2010

DEC1610

OFFICIAL COPY - 001.39621.000073 - FB001 - 01 - Approved(A) - - - 07-Aug-2013 09:18 AM

WEG Equipamentos Elétricos S.A.
Internation Division
AV. Prefeito Waldemar Grubba, 3000
89256-900 - Jaraguá do Sul - SC - Brasil
Phone: 55 (47) 3276-4002
Fax: 55(47) 3276-4060
www.weg.net

OFFICIAL COPY - 001.39621.000073 - FB001 - 01 - Approved(A) - - - 07-Aug-2013 09:18 AM

LUBE OIL SYSTEM INSTALLATION, OPERATION AND MAINTENANCE MANUAL

1. INTRODUCTION

Sliding Bearings and Mechanical Seals suffer overheating due to friction when there is proper lubrication. To ensure the life of the bearing or mechanical seal, they need fluid with a certain viscosity, pressure and flowand free of unwanted particles, such as: water, solid particles.

2. DESCRIPTION OF LUBE OIL SYSTEM

2.1. LUBE OIL UNIT

This Lube Oil Unit aims to maintain the lubrication of sliding bearings of the Pump, Electric Motor and Seals, providing clean fluid with temperature, pressure and flow as specified in project.

2.2. COMPONENTS

This Lube Oil Unit is composed by those follows main components:

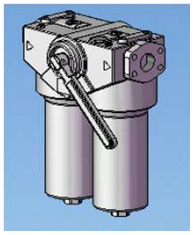

Oil Filter (Duplex)
The function of this component is to rid the oil of any impurities that may damage the system. This filter should be cleaned occasionally, always taking as reference the indication shown in Differential Pressure Transmitter.

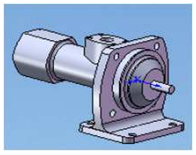

Auxiliary Oil Pump (Screw Pump)
The screw pump can be powered by an engine, steam turbine or the shaft end of a main pump. Positive displacement pumps, like this pump, driving the liquid constantly independent of possible restrictions that exist.

Drive (Electric Motor)

Driving Auxiliary Oil Pump (Screw Pump) assembled in skid of lube oil unit.

Heat Exchanger (MULTI-PLATES)

This equipment aims to remove heat caused by friction exists in the sliding bearings (pump and electric motor) and mechanical seals.

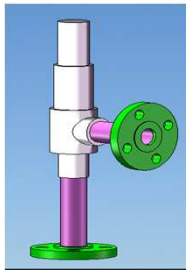

Pressure Relieve Valve (PSV)

The function of this valve is to limit the maximum operating pressure of the lube oil system. The selection criterion is based on thermal relief. If the system pressure is over specified, this valve will open and dump excess pressure back into the oil reservoir.

OFFICIAL COPY - 001.39621.000073 - FB001 - 01 - Approved(A) - - - 07-Aug-2013 09:18 AM

Pressure Control Valve (PCV)

It is a self-actuated valve. The point of the pilot is taken on the outlet of the lube oil unit, ensuring that the pressure at this point is always the same. To ensure this pressure, a portion of the flow is diverted from the discharge piping of main or auxiliary pumps to the lube oil reservoir.

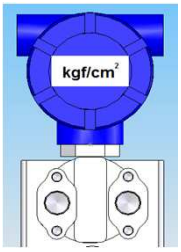

Level Transmitter (LIT)

This transmitter monitors the fluid level in the tank. Its adjustment and display show how many liters are in the tank. The level "zero" coincides with the level of suction loss of the pump. Below this level there is still fluid. This transmitter must be connected to the management system of the customer's plant. Alarms should be programmed for proper monitoring of the volume of oil existing in the oil reservoir.

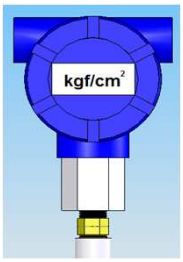

Pressure Transmitter (PIT)

This transmitter monitors the pressure in the system. This transmitter must be connected to the management system of the customer's plant. Alarms should be programmed for proper monitoring of oil pressure in the system. Pressure drop is indicative of leaks and system problems.

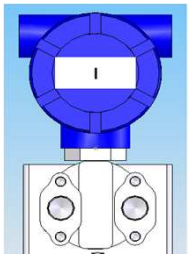

Differencial Pressure Transmitter (PDIT)

This transmitter monitors the pressure differential between the input and output filter Duplex. This transmitter must be connected to the management system of the customer's plant. Alarms should be programmed for proper monitoring of filter pressure differential. This pressure differential different as the manufacturer's specified Filter Duplex indicates obstruction or dirt in the filter elements.

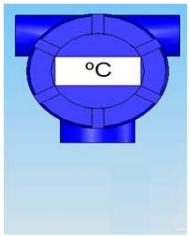

Temperature Transmitter (TIT)

This transmitter monitors the temperature of the system. This transmitter must be connected to the management system of the customer's plant. Alarms should be programmed for proper monitoring of the oil temperature in the system.

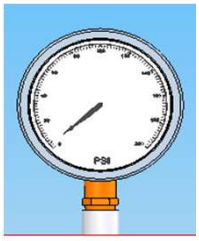

Pressure Gauge (PI)

The function of the gauge is to allow the viewing on site, in case of failure of the pressure transmitter, the pressure acting on the system.

Temperature Gauge (TI)

OFFICIAL COPY - 001.39621.000073 - FB001 - 01 - Approved(A) - - - 07-Aug-2013 09:18 AM

3. INSTALATION AND MAINTENANCE

This Lube Oil Unit shall be mounted horizontally with the surface parallel to the ground and beside the base of the main pump.

All pipes from interface must be properly connected according with the design specifications.

4. OPERATION

Connect all the interfaces between the main pump unit and lube oil unit.

Fill the reservoir with oil (defined in the project).

Ensure that all valves are open: instrumentation and operation.

Before start the auxiliary lube pump, make sure that the oil temperature is according with that specified in the project, otherwise put the electric heater in operation to the temperature specified.

Start the auxiliary lube pump, vent by two minutes.

Verify that the operation is doing the normal reading of all the local instruments and panel.

Let the lubrication system in operation for 15 minutes.

Begin the start procedure for Served Equipment (Process Pump) following his description of operation.

OFFICIAL COPY - 001.39621.000073 - FB001 - 01 - Approved(A) - - - 07-Aug-2013 09:18 AM

TRELLEBORG
ENGINEERED SYSTEMS

Storage, Handling, Installation and Maintenance of ANDRE Offshore Anti-Vibration Mounts to Drawing 3588-631

1. Storage

1.1. The anti-vibration mounts (AVMs) should be stored in a dry, cool area away from heat sources.

2. Handling

2.1. The AVMs must be handled with care; the use of lifting straps is advised to prevent any potential damage to the protective paint system. The straps must be positioned under the top plate (item 3).

3. Installation

3.1. Bolt each AVM to its location beneath the skid. Take care to ensure that each AVM is located at its correct position (P1, P2 or P3). The identity tag (item 19) states the AVM type, fixed or guided and its designation.

3.2. Tolerances for the deck mounting plates, where applicable (supplied by others):

a) The upper surface that mates with the 57 mm thick AVM deck plate (item 8) should be flat and level to within a tolerance of 3 in 1000.

b) The elevation at the centre of the upper surfaces of the three deck mounting plates should fall within a tolerance band of 20 mm.

3.3. Weld the AVM deck plate (item 8) to the FPSO deck mounting plate. The weld details and procedure is beyond the scope of this document. Ensure that the rubber components are protected from weld spatter and that the steel surface in contact with rubber does not exceed 80° C. It may be necessary to lay intermittent weld runs and allow sufficient time delay for the heat energy to dissipate.

3.4. To level the skid base frame set the shim pack thickness on each AVM as required and tighten the M36 nuts (item 12) that secure the AVM to the deck plate.

3.5. Apply the corrosion protection paint system to the AVM deck plate and deck mounting plate in accordance with the paint manufacturer's instructions.

3.6. Ensure that the operating area around the mounts is free of any debris.

4. Maintenance

4.1. The AVMs are generally maintenance free and need only occasional visual inspection with respect to:

- Obstructions: Ensure that the operating area around the mounts is free of any debris and that the area is maintained clean and tidy.
- Deterioration in the appearance of the rubber surface: Any signs of cracks greater than 3mm deep should be reported to Trelleborg Ridderkerk B.V.
- Deterioration in the paint work: Any damaged or deteriorating paint should be made good in accordance with the paint manufacturers approved specification.

5. Spare Parts

5.1. Since the AVMs are maintenance free no spare parts are required. Should any item require replacing then the mount should returned to Trelleborg Ridderkerk B.V. for refurbishment or replacement.